Chipsmall Limited consists of a professional team with an average of over 10 year of expertise in the distribution of electronic components. Based in Hongkong, we have already established firm and mutual-benefit business relationships with customers from,Europe,America and south Asia,supplying obsolete and hard-to-find components to meet their specific needs.

With the principle of “Quality Parts,Customers Priority,Honest Operation,and Considerate Service”,our business mainly focus on the distribution of electronic components. Line cards we deal with include Microchip,ALPS,ROHM,Xilinx,Pulse,ON,Everlight and Freescale. Main products comprise IC,Modules,Potentiometer,IC Socket,Relay,Connector.Our parts cover such applications as commercial,industrial, and automotives areas.

We are looking forward to setting up business relationship with you and hope to provide you with the best service and solution. Let us make a better world for our industry!

Contact us

Tel: +86-755-8981 8866 Fax: +86-755-8427 6832
Email & Skype: info@chipsmall.com Web: www.chipsmall.com
Address: A1208, Overseas Decoration Building, #122 Zhenhua RD., Futian, Shenzhen, China

DO NOT SCALE
DIMENSIONS IN mm

METRIC

THIRD ANGLE PROJECTION

P.C.B. HOLE DIM. ACTION PIN				
DRILLED HOLE	1,15	±0,025		mm
FIN. HOLE	0,94	to	1,09	mm
AFTER REFLOW	0,91	to	1,09	mm
Cu-thks	0,025	to	0,075	mm
SnPb-thks	0,004	to	0,010	mm

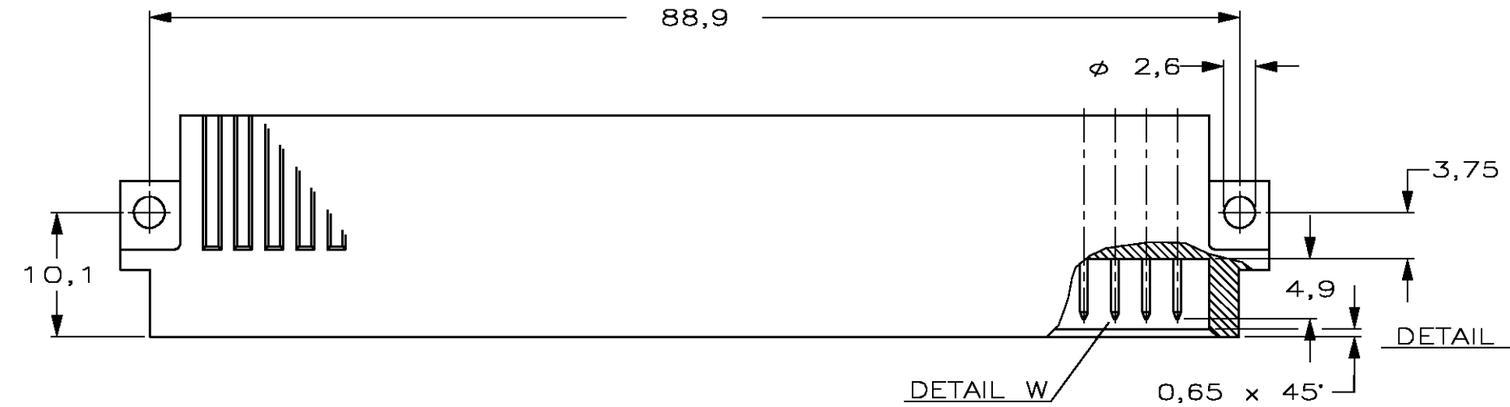

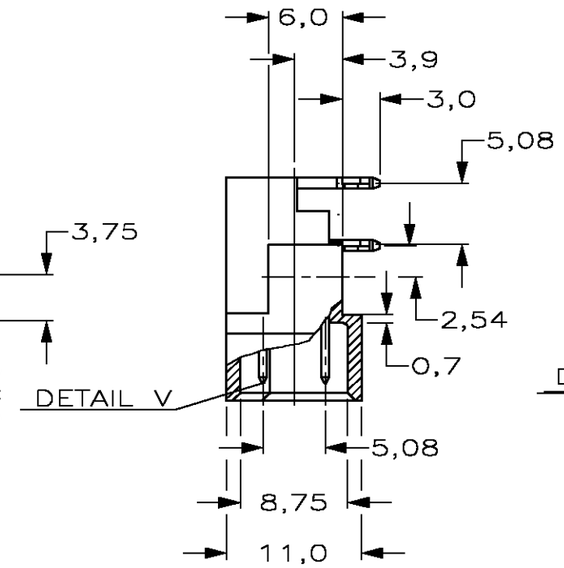

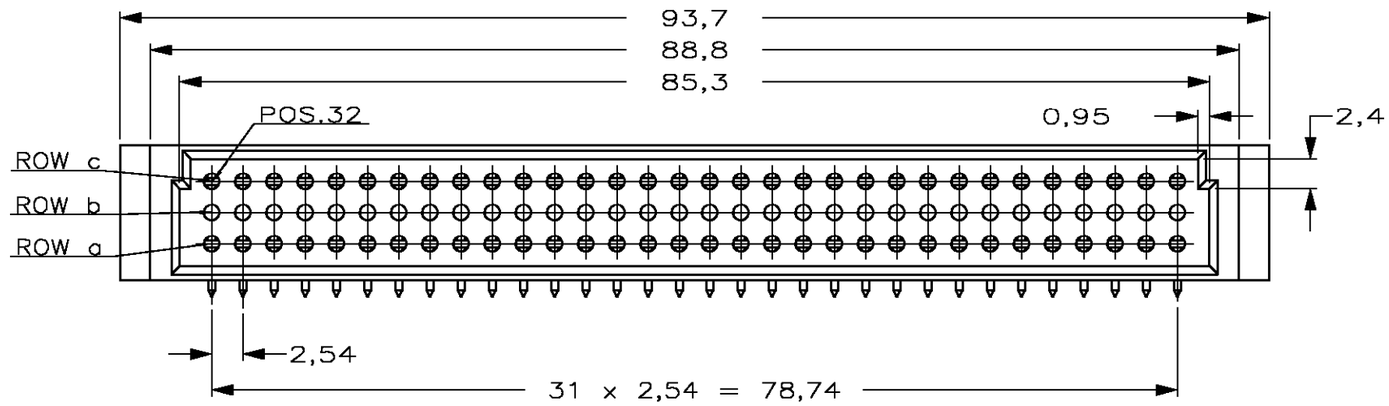

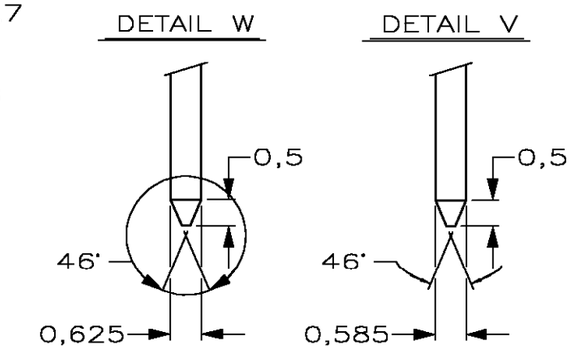

ROW	POS.																															
c	32	31	30	29	28	27	26	25	24	23	22	21	20	19	18	17	16	15	14	13	12	11	10	9	8	7	6	5	4	3	2	1
b	o	o	o	o	o	o	o	o	o	o	o	o	o	o	o	o	o	o	o	o	o	o	o	o	o	o	o	o	o	o	o	o
a	X	X	X	X	X	X	X	X	X	X	X	X	X	X	X	X	X	X	X	X	X	X	X	X	X	X	X	X	X	X	X	X

AN ASTERISK ,,X'' DENOTES A CONTACT.

NOTES:

1. MATERIAL:
   - HOUSING: THERMOPL.POLYESTER
     COLOUR : GREY
   - CONTACTS: PHOSPHORBRONZE
2. PLATING CONTACT :
   - 1 : AT CONNECTOR MATING SIDE Au OVER Ni, PERFORMANCE LEVEL I, ACC. IEC 603-2. SnPb AT ACTION-PIN.
   - 4 : AT CONNECTOR MATING SIDE Au OVER Ni, PERFORMANCE LEVEL II, ACC. IEC 603-2. SnPb AT ACTION-PIN.

	FINISH	MATERIAL	PARTNUMBER
OBSOLETE	SEE NOTE 2	SEE NOTE 1	~~216432-8~~
OBSOLETE	SEE NOTE 2	SEE NOTE 1	~~216432-7~~
	SEE NOTE 2	SEE NOTE 1	216432-4
	SEE NOTE 2	SEE NOTE 1	216432-1

LTR.	REVISION RECORD	DR.	CHK.	DATE
—	—	-	-	-
—	—	-	-	-
—	—	-	-	-
—	—	-	-	-
C	SR10-0227-02	BC	BC	06-Apr-'02
B	EH-0831-97	J.G.	J.G.	28-07-97
A	H-8830	R.v.L	J.v.G	29.07.91

CUSTOMER DRAWING — FOR REFERENCE ONLY WILL NOT BE UPDATED

© COPYRIGHT 19 - BY Tyco Electronics EC N.V.
ALL INTERNATIONAL RIGHTS RESERVED.Tyco PRODUCTS MAY BE COVERED BY U.S. AND FOREIGN AND/OR PATENTS PENDING.

THIS DRAWING IS UNPUBLISHED
~~RELEASED FOR PUBLICATION - ,19 -~~

tyco Electronics — Tyco Electronics EC N.V. Oostkamp - Belgium

NAME: 64 POS. DIN 41612 TYPE C MALE CONN. WITH ACTION-PIN FOR 1,6 P.C.B. THK'S

DR.: Colpaert B.	CHK.: Colpaert B.	APP.: Colpaert B.	DWG.No.	REV.LTR.	SHEET	
DATE: ———	DATE: -	DATE: -	C- 216432	C	1 OF 1	A3

8 7 6 5 4 3 2 1