Chipsmall Limited consists of a professional team with an average of over 10 year of expertise in the distribution of electronic components. Based in Hongkong, we have already established firm and mutual-benefit business relationships with customers from,Europe,America and south Asia,supplying obsolete and hard-to-find components to meet their specific needs.

With the principle of “Quality Parts,Customers Priority,Honest Operation,and Considerate Service”,our business mainly focus on the distribution of electronic components. Line cards we deal with include Microchip,ALPS,ROHM,Xilinx,Pulse,ON,Everlight and Freescale. Main products comprise IC,Modules,Potentiometer,IC Socket,Relay,Connector.Our parts cover such applications as commercial,industrial, and automotives areas.

We are looking forward to setting up business relationship with you and hope to provide you with the best service and solution. Let us make a better world for our industry!

Contact us

Tel: +86-755-8981 8866 Fax: +86-755-8427 6832
Email & Skype: info@chipsmall.com Web: www.chipsmall.com
Address: A1208, Overseas Decoration Building, #122 Zhenhua RD., Futian, Shenzhen, China

THIS DRAWING IS UNPUBLISHED. RELEASED FOR PUBLICATION 12JUN2012
© COPYRIGHT 2012 BY Tyco Electronics Japan G.K. ALL RIGHTS RESERVED.

LOC	DIST
J	-

REVISIONS

P	LTR	DESCRIPTION	DATE	DWN	APVD
	A	RELEASED	06DEC2013	T.S	N.Y
	B	ADD ITEM	18NOV2014	T.S	N.Y

1. -1 : TYPE I , INSULATION DIAMETER 1.05-1.15mm
   1- -1 : TYPE II, INSULATION DIAMETER 1.05-1.15mm
   -2 : TYPE I , INSULATION DIAMETER 0.93-1.05mm
   1- -2 : TYPE II, INSULATION DIAMETER 0.93-1.05mm
   -3 : TYPE I , INSULATION DIAMETER 0.93-1.05mm IPC, 1.05-1.15mm IPC
   -6 : TYPE I , INSULATION DIAMETER 1.1-1.2mm

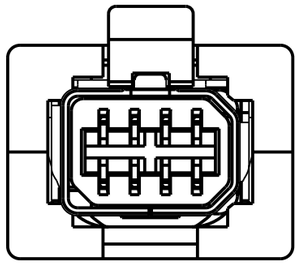

MATING SHAPE : TYPE I
2201855-1/-2/-3/-6
SCALE 4:1

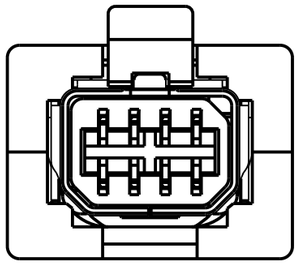

MATING SHAPE : TYPE II
1-2201855-1/-2
SCALE 4:1

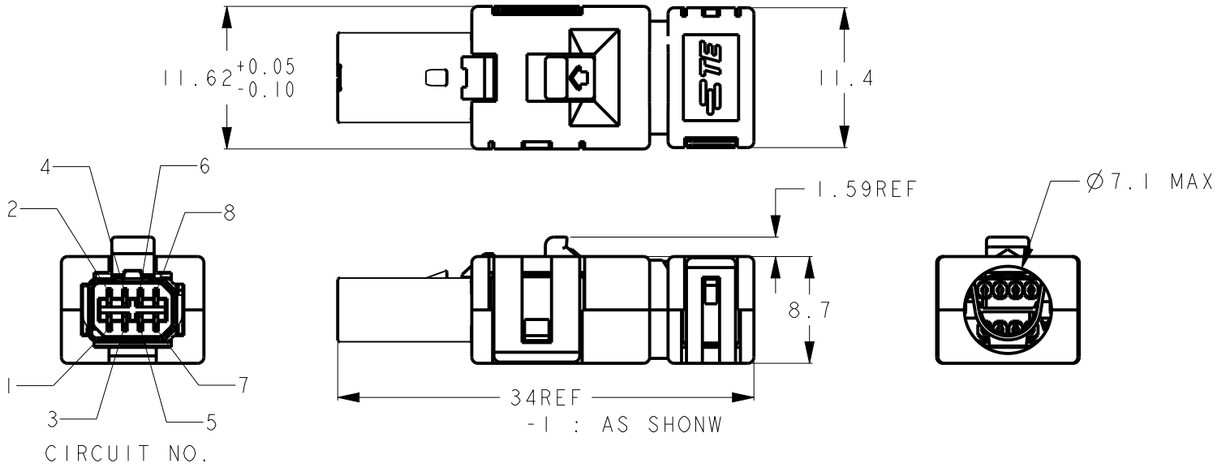

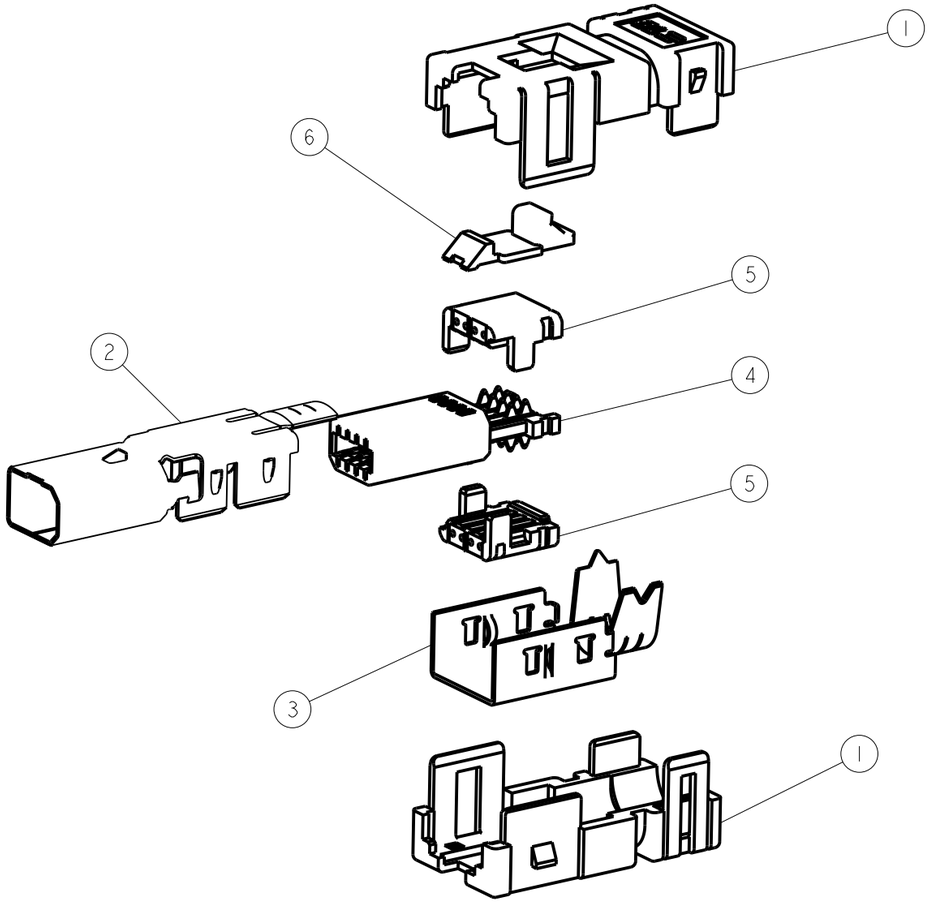

-1 : AS SHONW

1	1	1	1	1	1	THERMO PLASTIC	LOCK HSG	6
2	-	-	-	-	-	THERMO PLASTIC	CABLE HSG Ø1.10-1.20 COLOR : GREEN	5
-	1	2	2	-	-		CABLE HSG Ø0.93-1.05 COLOR : RED	
-	1	-	-	2	2		CABLE HSG Ø1.05-1.15 COLOR : BLUE	
1	1	1	1	1	1	HSG MATERIAL:THERMO PLASTIC CONTACT MATERIAL:COPPER ALLOY FINISH:Ni PLATING ALL OVER CONTACT AREA Au PLATING TERMINATION AREA Au PLATING	PLUG SUB ASSY	4
1	1	1	1	1	1	MATERIAL:COPPER ALLOY FINISH:NICKEL PLATING	BOTTOM SHELL	3
-	-	1	-	1	-	MATERIAL:COPPER ALLOY FINISH:NICKEL PLATING	PLUG TOP SHELL TYPEII	2
1	1	-	1	-	1	MATERIAL:COPPER ALLOY FINISH:NICKEL PLATING	PLUG TOP SHELL TYPEI	
2	2	2	2	2	2	THERMO PLASTIC	PLUG COVER HSG	1
-6	-3	1- -2	-2	1- -1	-1	MATERIAL/FINISH	PART NAME	ITEM

THIS DRAWING IS A CONTROLLED DOCUMENT.

DIMENSIONS: mm

TOLERANCES UNLESS OTHERWISE SPECIFIED: ±0.5
~~0 PLC ±1~~
~~1 PLC ±0.5~~
~~2 PLC ±0.13~~
~~3 PLC ±0.013~~
~~4 PLC ±0.0001~~
ANGLES ±-

MATERIAL -
FINISH -

DWN 06DEC2013 T.SHIMOYASU
CHK 06DEC2013 M.HARASAWA
APVD 06DEC2013 N.YAMASAKI
PRODUCT SPEC 108-78955
APPLICATION SPEC 114-5506
WEIGHT -

TE Connectivity

NAME
INDUSTRIAL MINI I/O PIERCING
PLUG CONNECTOR KIT

SIZE	CAGE CODE	DRAWING NO	RESTRICTED TO
A3	00779	C-2201855	-

CUSTOMER DRAWING
SCALE 2:1 SHEET 1 OF 1 REV B

1470-19 (3/11)