Chipsmall Limited consists of a professional team with an average of over 10 year of expertise in the distribution of electronic components. Based in Hongkong, we have already established firm and mutual-benefit business relationships with customers from,Europe,America and south Asia,supplying obsolete and hard-to-find components to meet their specific needs.

With the principle of “Quality Parts,Customers Priority,Honest Operation,and Considerate Service”,our business mainly focus on the distribution of electronic components. Line cards we deal with include Microchip,ALPS,ROHM,Xilinx,Pulse,ON,Everlight and Freescale. Main products comprise IC,Modules,Potentiometer,IC Socket,Relay,Connector.Our parts cover such applications as commercial,industrial, and automotives areas.

We are looking forward to setting up business relationship with you and hope to provide you with the best service and solution. Let us make a better world for our industry!

Contact us

Tel: +86-755-8981 8866 Fax: +86-755-8427 6832
Email & Skype: info@chipsmall.com Web: www.chipsmall.com
Address: A1208, Overseas Decoration Building, #122 Zhenhua RD., Futian, Shenzhen, China

THIS DRAWING IS UNPUBLISHED. RELEASED FOR PUBLICATION 20
© COPYRIGHT 20 BY - ALL RIGHTS RESERVED.

LOC	DIST
-	-

REVISIONS

P	LTR	DESCRIPTION	DATE	DWN	APVD
	1	PROPOSED	09OCT2012	CD	MM
	-	-	-	-	-

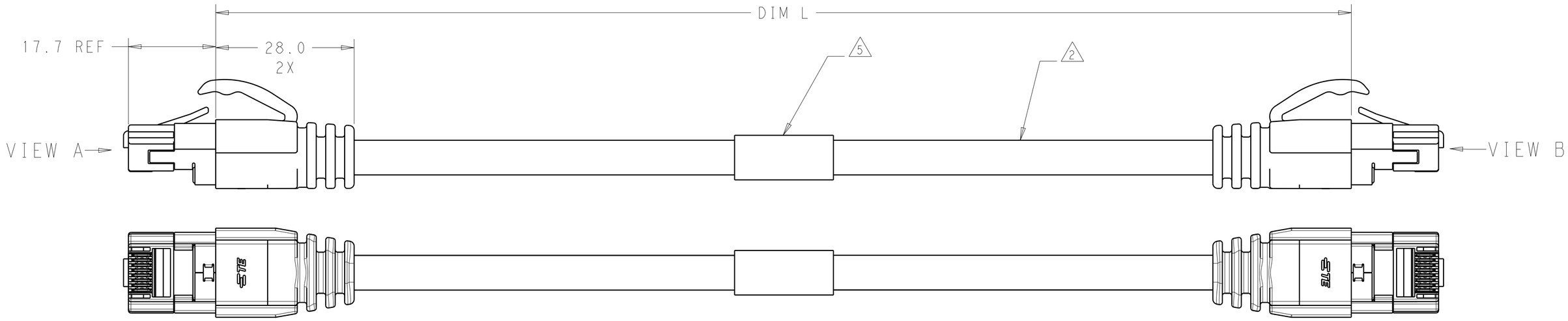

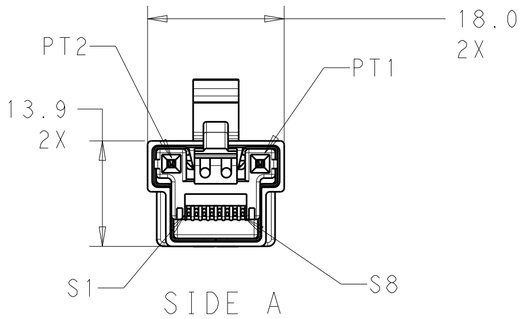

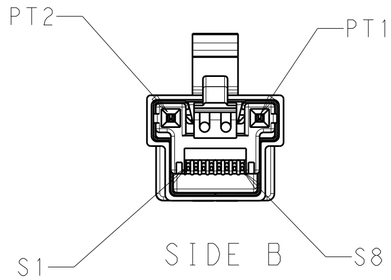

NOTES:

1. MATERIALS AND FINISH:
   - HOUSING: PC, COLOR: CLEAR
   - CONTACTS: COPPER ALLOY
     FINISH: GOLD OVER NICKEL (SIGNAL CONTACTS)
     GOLD OVER NICKEL (POWER CONTACTS)
   - CONNECTOR SHIELD: COPPER-ZINC ALLOY
     FINISH: TIN OVER NICKEL
   - STRAIN RELIEF: TPV, COLOR: BLACK

2. CABLE SPECIFICATION:
   - JACKET: PVC, COLOR: RAL9017 - BLACK, OD 7.50 ±0.15
   - SIGNAL CONDUCTORS: 4 PAIR, 26AWG STRANDED (SHIELDED)
   - POWER CONDUCTORS: QTY 2, 18AWG STRANDED
   - MINIMUM BEND RADIUS: 50MM
   - -20 TO 80°C TEMPERATURE RANGE
   - UL444/CM CONSTRUCTION

3. MUST COMPLY WITH DIRECTIVE 2002/95/EC (ROHS)

4. THIS PRODUCT HAS NOT COMPLETED VALIDATION TESTING

5. LABEL CONTENT AS FOLLOWS:

TE P/N YYWW	YY=YEAR WW=WEEK

SIGNAL WIRING DETAILS

	COLOR	SIDE A	SIDE B
PAIR 1	WHITE/ORANGE STRIPE	1	1
	ORANGE	2	2
PAIR 2	WHITE/GREEN STRIPE	3	3
PAIR 3	BLUE	4	4
	WHITE/BLUE STRIPE	5	5
	GREEN	6	6
PAIR 4	WHITE/BROWN STRIPE	7	7
	BROWN	8	8

POWER CABLE CONNECTION

COLOR	SIDE A	SIDE B
BLACK	PT1	PT1
RED	PT2	PT2

DIM "L"	PART NO.
25000.0±250.0	2213121-4
10000.0±100.0	2213121-3
5000.0±50.0	2213121-2
2000.0±20.0	2213121-1

THIS PRINT IS
PRELIMINARY
UNQUALIFIED PRODUCT
CONTACT PRODUCT ENGINEERING
BEFORE USING THIS PRINT

THIS DRAWING IS A CONTROLLED DOCUMENT.

DIMENSIONS: mm

TOLERANCES UNLESS OTHERWISE SPECIFIED:

0 PLC	±-
1 PLC	±0.2
2 PLC	±0.13
3 PLC	±-
4 PLC	±-
ANGLES	±3°

MATERIAL 1 -
FINISH -

DWN C.DAILY 18MAY2012
CHK M.MOSTOLLER 18MAY2012
APVD -
PRODUCT SPEC 108-64022
APPLICATION SPEC -
WEIGHT -

TE Connectivity

NAME CABLE ASSEMBLY, ETHERNET + POWER SHIELDED CABLE

SIZE	CAGE CODE	DRAWING NO	RESTRICTED TO
A2	00779	C-2213121	-

CUSTOMER DRAWING | SCALE 7:4 | SHEET 1 OF 1 | REV 1

1471-9 (3/11)