Chipsmall Limited consists of a professional team with an average of over 10 year of expertise in the distribution of electronic components. Based in Hongkong, we have already established firm and mutual-benefit business relationships with customers from,Europe,America and south Asia,supplying obsolete and hard-to-find components to meet their specific needs.

With the principle of “Quality Parts,Customers Priority,Honest Operation,and Considerate Service”,our business mainly focus on the distribution of electronic components. Line cards we deal with include Microchip,ALPS,ROHM,Xilinx,Pulse,ON,Everlight and Freescale. Main products comprise IC,Modules,Potentiometer,IC Socket,Relay,Connector.Our parts cover such applications as commercial,industrial, and automotives areas.

We are looking forward to setting up business relationship with you and hope to provide you with the best service and solution. Let us make a better world for our industry!

Contact us

Tel: +86-755-8981 8866 Fax: +86-755-8427 6832
Email & Skype: info@chipsmall.com Web: www.chipsmall.com
Address: A1208, Overseas Decoration Building, #122 Zhenhua RD., Futian, Shenzhen, China

THIS DRAWING IS UNPUBLISHED. RELEASED FOR PUBLICATION 20
© COPYRIGHT 20 BY - ALL RIGHTS RESERVED.

LOC	DIST
ES	00

REVISIONS

P	LTR	DESCRIPTION	DATE	DWN	APVD
	B	REVISED PER ECR-16-005843	08SEP2016	BW	GJ

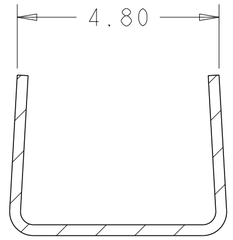

SECTION E-E
SCALE 10:1

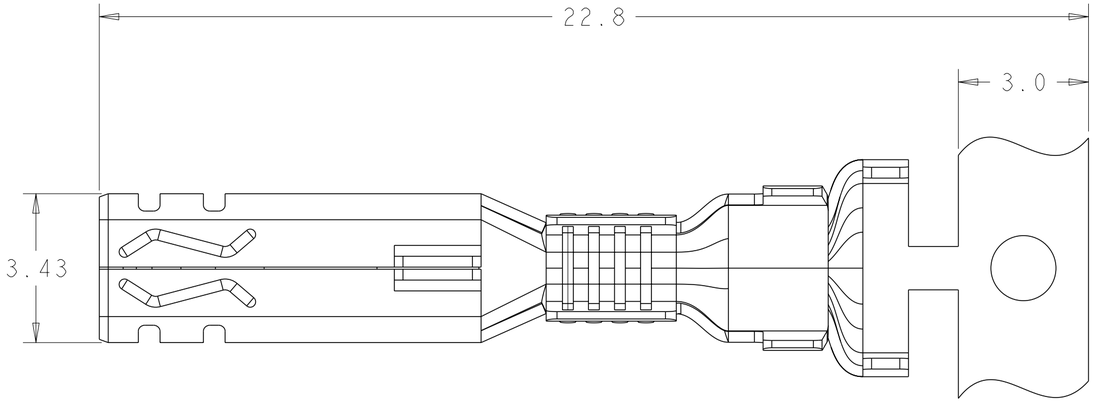

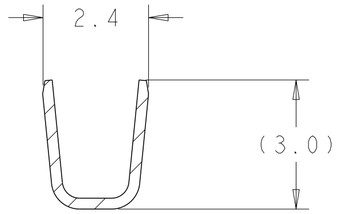

SECTION C-C
SCALE 10:1

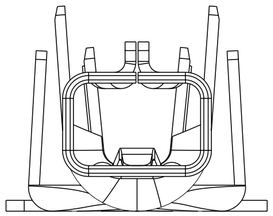

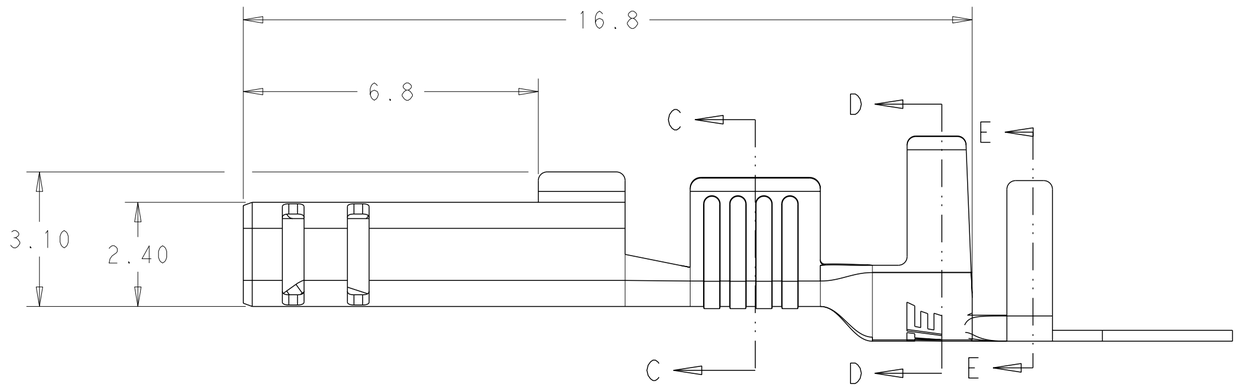

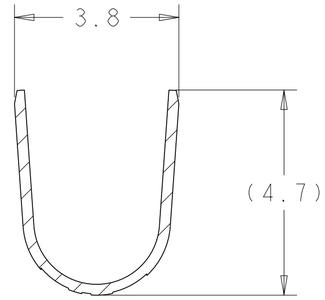

SECTION D-D
SCALE 10:1

1 APPLICABLE MATED PLUG HOUSING P/N:
-2232362-.

2 APPLICABLE WIRE: 16-19 AWG COPPER STRANDED OR
2x 22 AWG COPPER STRANDED.
FOR A #19 AWG WIRE THE RECOMMENDED
MINIMUM CROSS-SECTIONAL AREA IS 0.65mm² (1300 CMA).

3 APPLICABLE INSULATION DIAMETER: 2.00-3.30mm
(2.0 mm MAX FOR 2x 22 AWG).

4 PRELIMINARY - NOT FOR PRODUCTION.

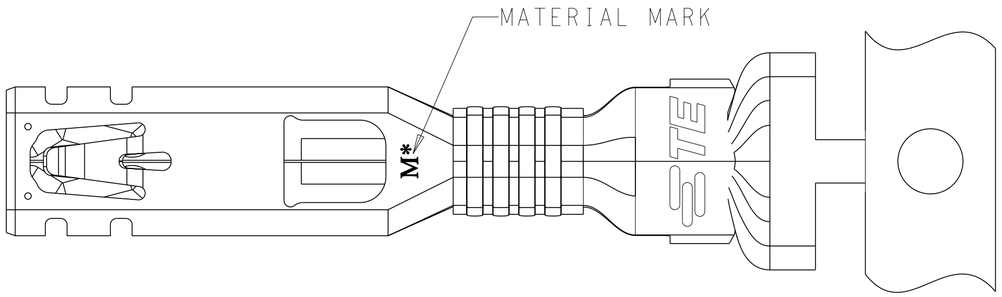

MATERIAL	MATERIAL MARK	TEMP.RATING	PART NO.
COPPER ALLOY	M0	HIGH (150°C)	4 2232723-2
PHOS BRONZE	M1	STANDARD (105°C)	2232723-1

THIS DRAWING IS A CONTROLLED DOCUMENT.

DIMENSIONS: mm

TOLERANCES UNLESS OTHERWISE SPECIFIED:
0 PLC ±
1 PLC ±0.5
2 PLC ±0.30
3 PLC ±
4 PLC ±
ANGLES ±-

MATERIAL: SEE TABLE
FINISH: PRE-TIN

DWN WEST WANG 20MAR2014
CHK DANIEL ZHANG 20MAR2014
APVD YUHONG MAO 20MAR2014
PRODUCT SPEC 108-106147
APPLICATION SPEC 114-106147
WEIGHT -

TE Connectivity

NAME: RECEPTACLE CONTACT
3P MFBL POWER TRIPLE LOCK
-

SIZE	CAGE CODE	DRAWING NO	RESTRICTED TO
A2	00779	C- 2232723	-

Customer Drawing | SCALE - | SHEET 1 OF 1 | REV B

1471-9 (3/13)