Chipsmall Limited consists of a professional team with an average of over 10 year of expertise in the distribution of electronic components. Based in Hongkong, we have already established firm and mutual-benefit business relationships with customers from,Europe,America and south Asia,supplying obsolete and hard-to-find components to meet their specific needs.

With the principle of “Quality Parts,Customers Priority,Honest Operation,and Considerate Service”,our business mainly focus on the distribution of electronic components. Line cards we deal with include Microchip,ALPS,ROHM,Xilinx,Pulse,ON,Everlight and Freescale. Main products comprise IC,Modules,Potentiometer,IC Socket,Relay,Connector.Our parts cover such applications as commercial,industrial, and automotives areas.

We are looking forward to setting up business relationship with you and hope to provide you with the best service and solution. Let us make a better world for our industry!

Contact us

Tel: +86-755-8981 8866 Fax: +86-755-8427 6832
Email & Skype: info@chipsmall.com Web: www.chipsmall.com
Address: A1208, Overseas Decoration Building, #122 Zhenhua RD., Futian, Shenzhen, China

THIS DRAWING IS UNPUBLISHED. RELEASED FOR PUBLICATION – , – .
© COPYRIGHT – By – ALL RIGHTS RESERVED.

LOC	DIST
H	—

REVISIONS

P	LTR	DESCRIPTION	DATE	DWN	APVD
	A	INITIAL RELEASE	15NOV2013	YC	BvH
	A1	ECR–14–011671	16AUG2014	GSK	BvH

NOTES:
Tolerances cable lengths:

0m to 0.5m	+30mm
0.5m to 1.0m	+50mm
1.0m to 3.0m	+100mm
< 3.0m	+1.5%

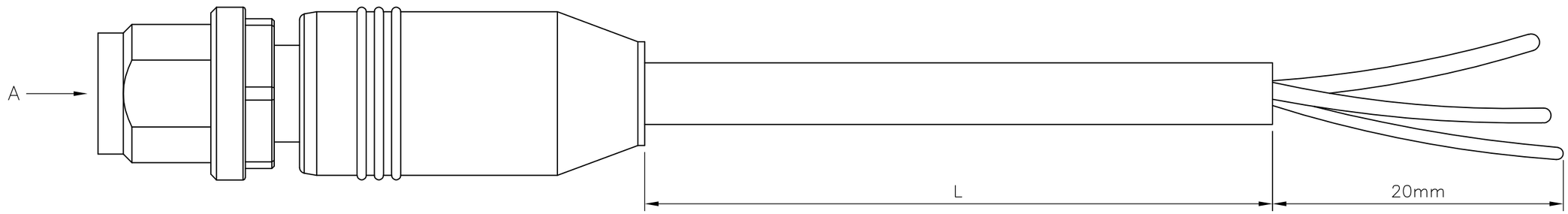

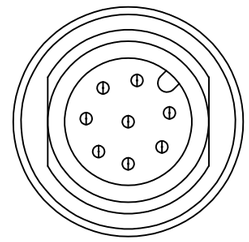

VIEW 'A'

TECHNICAL DATA	
Operating voltage	max. 30 V AC/DC
Operating current per contact	max. 2 A
Locking of ports	Screw thread M12 x 1 mm (recommended torque 0.6 Nm) self–securing
Protection	IP65 and IP67 when plugged and screwed down (EN 60529)

PUR CABLE	
No./diameter of wires	8 x 0.25 mm²
Wire isolation	PP (br, wh, bl, bk, gr, pk, vi, or)
C–track properties	2 million
Jacket	PUR (UL/CSA)
Outer diameter	approx. 7.0 mm
Bend radius (moving)	10 x outer diameter
Temperature range (fixed)	–40...+80 °C
Temperature range (mobile)	–20...+80 °C

Schematic diagram

Contact Layout
Male

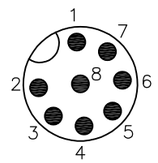

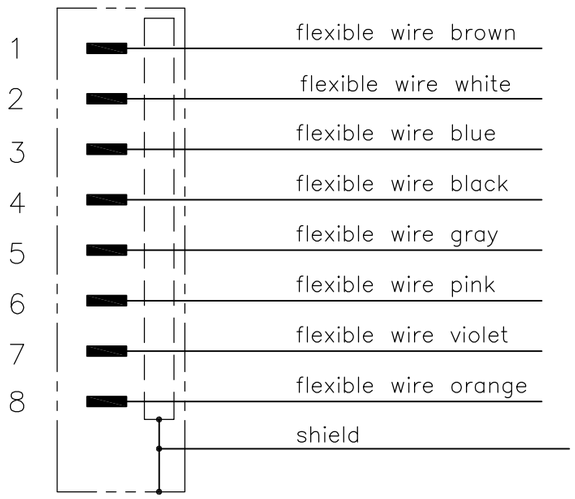

	LENGTH"L"	MATERIAL	JACKET COLOR	TE PN	DESCRIPTION	ITEM
8 pos	10mtr	PUR	Grey	2273048–4	8x24AWG PUR 10.0m	4
	5mtr			2273048–3	8x24AWG PUR 5.0m	3
	3mtr			2273048–2	8x24AWG PUR 3.0m	2
	1.5mtr			2273048–1	8x24AWG PUR 1.5m	1

THIS DRAWING IS A CONTROLLED DOCUMENT.

DIMENSIONS: mm

TOLERANCES UNLESS OTHERWISE SPECIFIED:
0 PLC ± –
1 PLC ± –
2 PLC ± –
3 PLC ± –
4 PLC ± –
ANGLES ± –

MATERIAL –
FINISH –

DWN YATHISH.C 15NOV2013
CHK B.VELDHOVEN 15NOV2013
APVD A.VAN ZANDVOORT 15NOV2013
PRODUCT SPEC 108–19483
APPLICATION SPEC 114–32127
WEIGHT –

TE Connectivity

NAME M12 X 1.0 STRAIGHT PLUG PIGT SHLD A

SIZE	CAGE CODE	DRAWING NO	RESTRICTED TO
A3	00779	C–2273048	—

CUSTOMER DRAWING | SCALE NTS | SHEET 1 OF 1 | REV A1

1470–19 (3/11)