Chipsmall Limited consists of a professional team with an average of over 10 year of expertise in the distribution of electronic components. Based in Hongkong, we have already established firm and mutual-benefit business relationships with customers from,Europe,America and south Asia,supplying obsolete and hard-to-find components to meet their specific needs.

With the principle of “Quality Parts,Customers Priority,Honest Operation,and Considerate Service”,our business mainly focus on the distribution of electronic components. Line cards we deal with include Microchip,ALPS,ROHM,Xilinx,Pulse,ON,Everlight and Freescale. Main products comprise IC,Modules,Potentiometer,IC Socket,Relay,Connector.Our parts cover such applications as commercial,industrial, and automotives areas.

We are looking forward to setting up business relationship with you and hope to provide you with the best service and solution. Let us make a better world for our industry!

Contact us

Tel: +86-755-8981 8866 Fax: +86-755-8427 6832
Email & Skype: info@chipsmall.com Web: www.chipsmall.com
Address: A1208, Overseas Decoration Building, #122 Zhenhua RD., Futian, Shenzhen, China

THIS DRAWING IS UNPUBLISHED. RELEASED FOR PUBLICATION 20
© COPYRIGHT 20 BY - ALL RIGHTS RESERVED.

REVISIONS

P	LTR	DESCRIPTION	DATE	DWN	APVD
	A	INITIAL RELEASE	06JUN2018	AD	SH

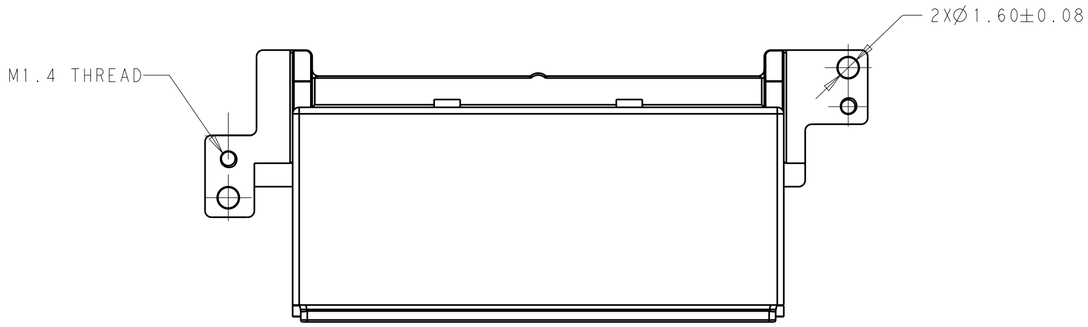

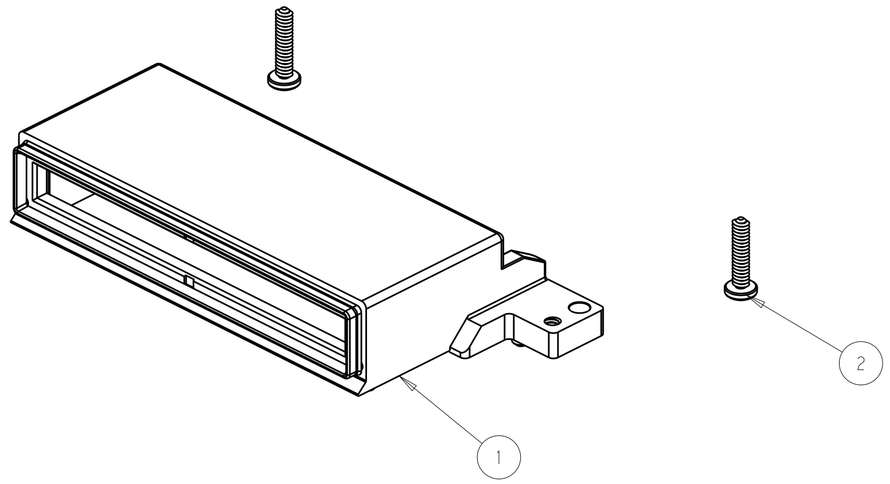

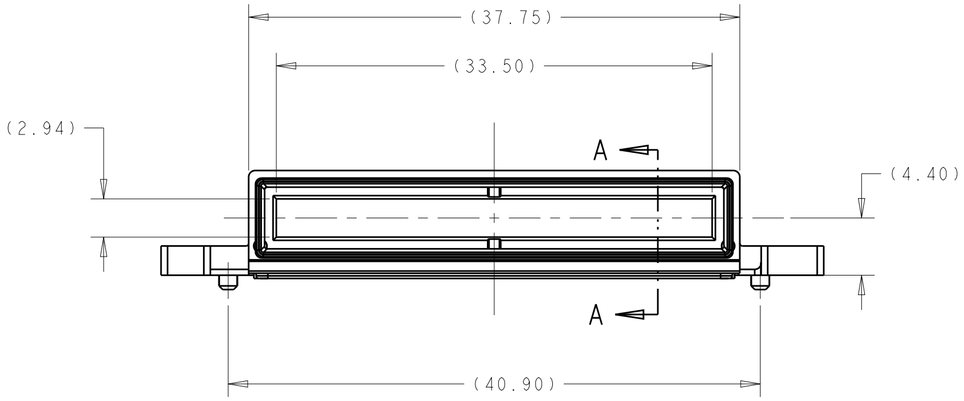

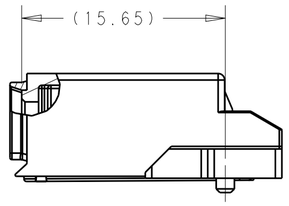

SECTION A-A

1. MATERIAL: RECEPTACLE COVER-ZINC ALLOY
   GASKET-SILICON
   SCREW-STAINLESS STEEL
2. PLATING: RECEPTACLE COVER-1.27um NICKEL OVER COPPER PLATING
3. MATE WIHT MSA COMPLIANT TRANSCEIVER
4. PACKAGED AS SEPARATED KITS IN ONE BOX

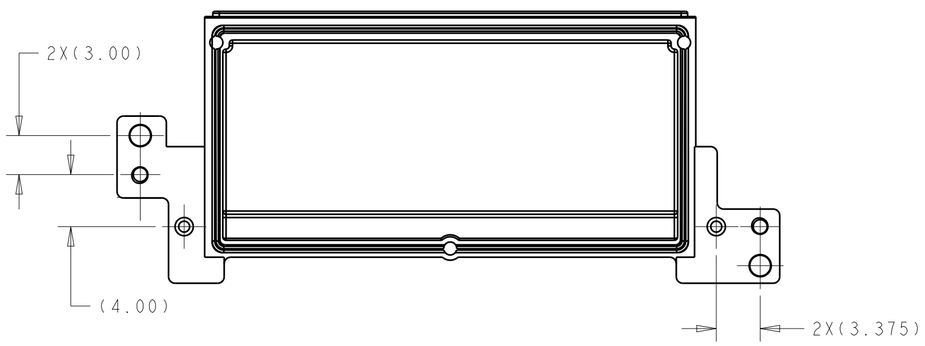

-1	PART NUMBER	DESCRIPTION	ITEM
2	2292789-1	M1.4X6 SCREW	2
1	2274846-1	COVER WIHT GASKET	1

THIS DRAWING IS A CONTROLLED DOCUMENT.

DIMENSIONS: mm

TOLERANCES UNLESS OTHERWISE SPECIFIED:
0 PLC ±-
1 PLC ±0.25
2 PLC ±0.15
3 PLC ±0.10
4 PLC ±-
ANGLES ±-

MATERIAL - -
FINISH - -

DWN ANDY.CIE 30MAY2016
CHK SEAN.HAN 30MAY2016
APVD SEAN.HAN 30MAY2016
PRODUCT SPEC -
APPLICATION SPEC -
WEIGHT -

TE Connectivity

NAME RECEPTACLE COVER WITH SCREW CFP2 1X1 -

SIZE A2 | CAGE CODE - | DRAWING NO C-2304452 | RESTRICTED TO -

CUSTOMER DRAWING | SCALE 2:1 | SHEET 1 OF 1 | REV A

1471-9 (3/13)