Chipsmall Limited consists of a professional team with an average of over 10 year of expertise in the distribution of electronic components. Based in Hongkong, we have already established firm and mutual-benefit business relationships with customers from,Europe,America and south Asia,supplying obsolete and hard-to-find components to meet their specific needs.

With the principle of “Quality Parts,Customers Priority,Honest Operation,and Considerate Service”,our business mainly focus on the distribution of electronic components. Line cards we deal with include Microchip,ALPS,ROHM,Xilinx,Pulse,ON,Everlight and Freescale. Main products comprise IC,Modules,Potentiometer,IC Socket,Relay,Connector.Our parts cover such applications as commercial,industrial, and automotives areas.

We are looking forward to setting up business relationship with you and hope to provide you with the best service and solution. Let us make a better world for our industry!

Contact us

Tel: +86-755-8981 8866 Fax: +86-755-8427 6832
Email & Skype: info@chipsmall.com Web: www.chipsmall.com
Address: A1208, Overseas Decoration Building, #122 Zhenhua RD., Futian, Shenzhen, China

REV.	DATE	DESCRIPTION
NC	09/22/02	INITIAL RELEASE

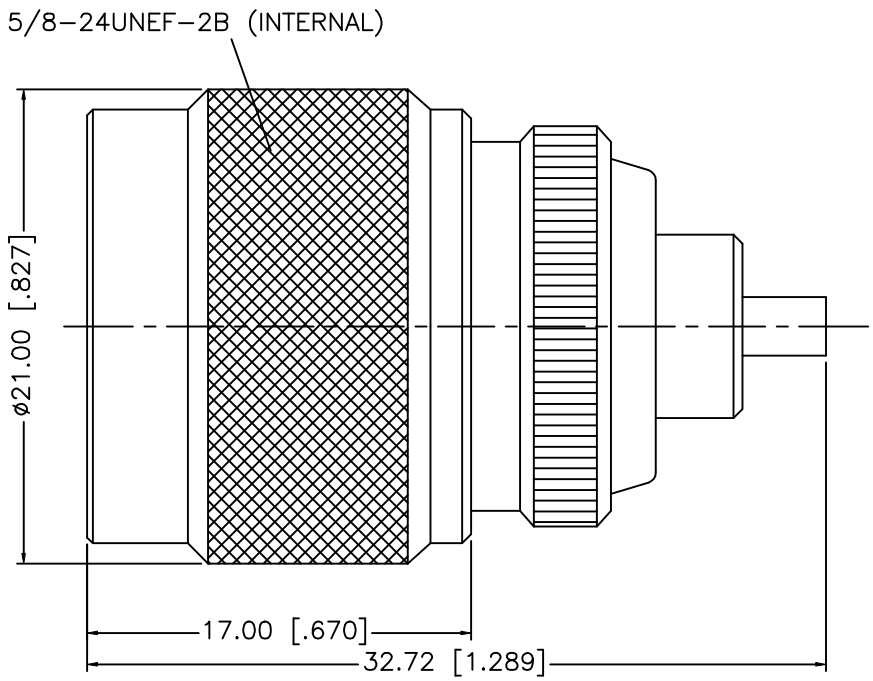

8			
7			
6			
5			
4	GASKET	SILICONE	RED
3	CONTACT PIN	BER.COPPER	GOLD
2	INSULATOR	TEFLON	NATURAL
1	BODY	BRASS	NICKEL
	DESCRIPTION	MATERIAL	FINISH

UNLESS OTHERWISE SPECIFIED DIMENSIONS ARE IN MILLIMETERS

DIMENSIONS IN [ ] ARE IN INCHES FOR CUSTOMER REFERANCE ONLY

UNLESS OTHERWISE SPECIFIED TOLERANCES FOR INCHES ARE:

.XXX = ± 0.005"
.XX = ± 0.010"
.X = ± 0.020"

DO NOT SCALE DRAWING

APPROVALS		DATE
DRAWN	G.R.S.	09/22/02
CHECKED		
ISSUED		

Amphenol - Connex
CONNECTOR CORPORATION

TITLE: N PLUG TO MMCX JACK ADAPTOR

SIZE	FSCM NO.	DWG. NO.	REV.
A	99001	242166.DWG	NC

SCALE	PART NO.	SHEET
NA	242166	1 OF 1