Chipsmall Limited consists of a professional team with an average of over 10 year of expertise in the distribution of electronic components. Based in Hongkong, we have already established firm and mutual-benefit business relationships with customers from,Europe,America and south Asia,supplying obsolete and hard-to-find components to meet their specific needs.

With the principle of “Quality Parts,Customers Priority,Honest Operation,and Considerate Service”,our business mainly focus on the distribution of electronic components. Line cards we deal with include Microchip,ALPS,ROHM,Xilinx,Pulse,ON,Everlight and Freescale. Main products comprise IC,Modules,Potentiometer,IC Socket,Relay,Connector.Our parts cover such applications as commercial,industrial, and automotives areas.

We are looking forward to setting up business relationship with you and hope to provide you with the best service and solution. Let us make a better world for our industry!

Contact us

Tel: +86-755-8981 8866 Fax: +86-755-8427 6832
Email & Skype: info@chipsmall.com Web: www.chipsmall.com
Address: A1208, Overseas Decoration Building, #122 Zhenhua RD., Futian, Shenzhen, China

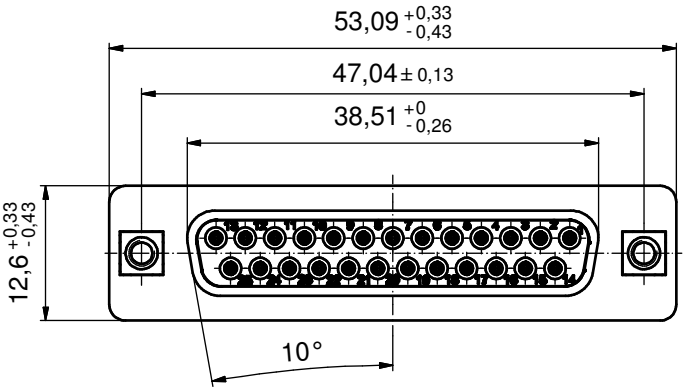

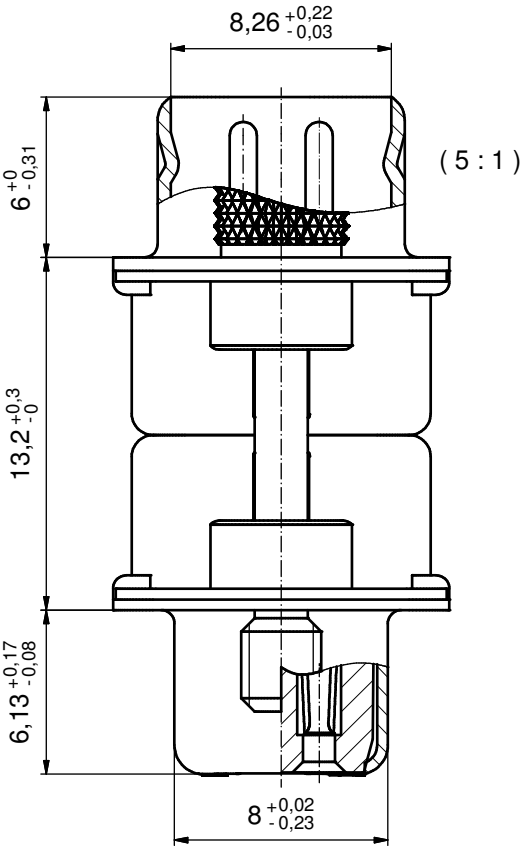

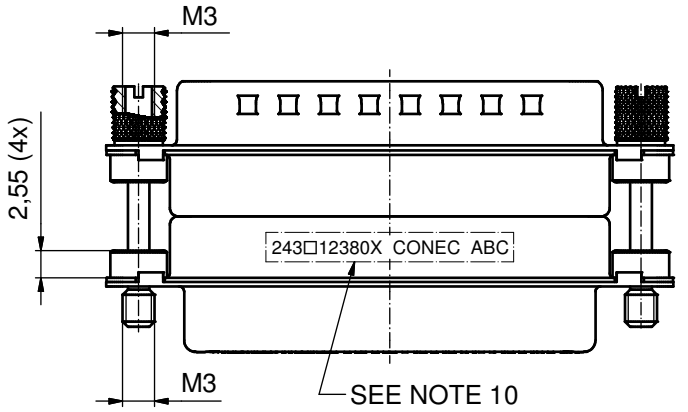

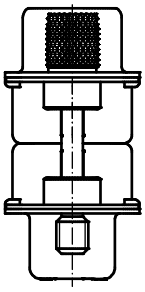

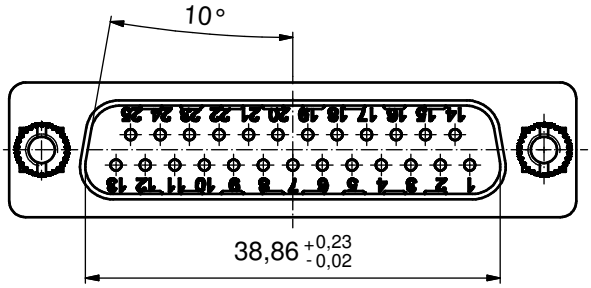

NOTES:

1. METALSHELLS: STEEL; min. 315µin TIN over 40-80µin NICKEL
2. INSULATORS: HIGH TEMPERATURE PLASTIC UL 94 V-0, BLACK
3. CONTACTS: COPPER ALLOY; PLATING (SEE PART NO.):
   - □ PLEASE ADD A for GOLD FLASH over NICKEL (PREFERRED TYPE)
   - □ PLEASE ADD B for 20µin HARD GOLD over min. 50µin NICKEL
   - □ PLEASE ADD C for 30µin HARD GOLD over min. 50µin NICKEL
4. THREADED INSERTS: COPPER ALLOY; min. 200µin TIN over 80µin NICKEL
5. COLLARS: COPPER ALLOY; min. 200µin TIN over 80µin NICKEL
6. JACK SCREWS: COPPER ALLOY; NICKEL PLATED
7. CAPACITANCE: 370pF±20%
8. DIELECTRIC WITHSTANDING VOLTAGE: 424 VDC
9. MAXIMUM TORQUE VALUE FOR THREAD: 6 in.LB
10. CONNECTOR IS PART MARKED: 243□12380X CONEC ABC (see note 3)

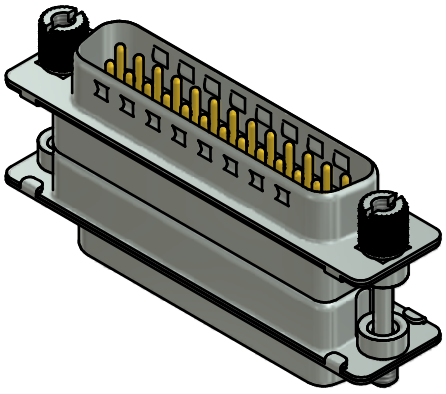

RoHS compliant

THIS DRAWING MAY NOT BE COPIED OR REPRODUCED IN ANY WAY, AND MAY NOT BE PASSED ON TO A THIRD PARTY WITHOUT WRITTEN PERMISSION. OWNERSHIP AND COPYRIGHT OF CONEC GmbH

DO NOT ALTER CAD DRAWING BY HAND

rev.	description	date	name
a	Original		

tolerance — dim. in mm

	date	name
drawn	27.05.15	Henneboel
appd.	27.05.15	Lehmenkühler
norm		
d-old		

CONEC®

scale: 2:1 (5:1)

material: SEE NOTES

title:

D-SUB C FILTER ADAPTER

PLUG / SOCKET, 25pos.
with threaded insert and jack screw

dwg no: 24K1A1595

DIN-A3

sh: 1

part no: 243□12380X (see note 3)