Chipsmall Limited consists of a professional team with an average of over 10 year of expertise in the distribution of electronic components. Based in Hongkong, we have already established firm and mutual-benefit business relationships with customers from,Europe,America and south Asia,supplying obsolete and hard-to-find components to meet their specific needs.

With the principle of “Quality Parts,Customers Priority,Honest Operation,and Considerate Service”,our business mainly focus on the distribution of electronic components. Line cards we deal with include Microchip,ALPS,ROHM,Xilinx,Pulse,ON,Everlight and Freescale. Main products comprise IC,Modules,Potentiometer,IC Socket,Relay,Connector.Our parts cover such applications as commercial,industrial, and automotives areas.

We are looking forward to setting up business relationship with you and hope to provide you with the best service and solution. Let us make a better world for our industry!

Contact us

Tel: +86-755-8981 8866 Fax: +86-755-8427 6832
Email & Skype: info@chipsmall.com Web: www.chipsmall.com
Address: A1208, Overseas Decoration Building, #122 Zhenhua RD., Futian, Shenzhen, China

DO NOT SCALE ALL DIMENSIONS ARE FOR REFERENCE ONLY

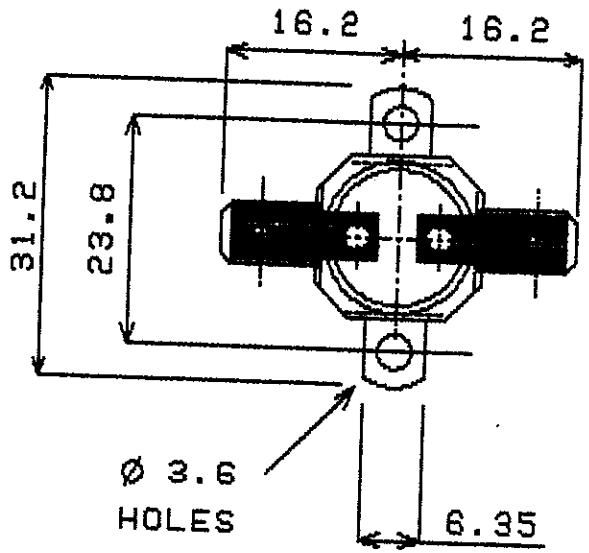

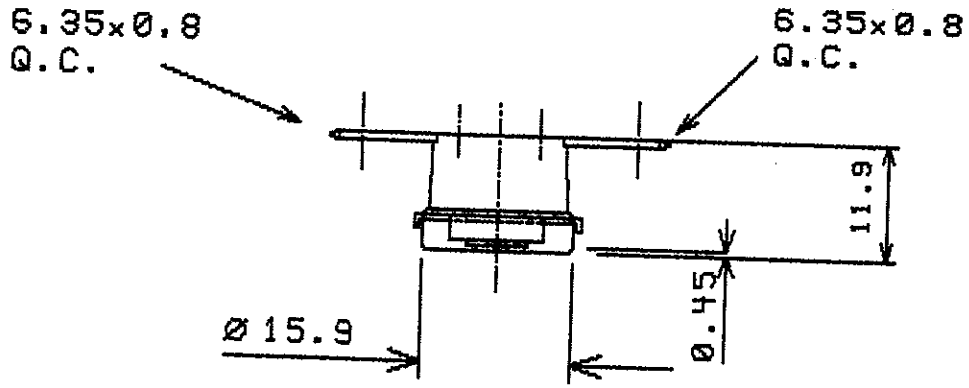

OPERATING CRITERIA

VOLTS; 240 AMPS; 10 HZ;

OPERATING TEMPS. DEG.C

OPEN; 70 ± 3
CLOSE; 55 ± 5

NOTE! ORIENTATION OF BRACKET IS NOT FIXED

ISSUE	A	B							
MOD No	3052	3250							
MTH/YR	3/97	7/98							

CODING REQUIREMENTS

COLOUR; LASER CODE
L70C [illegible] "35 XXX

CAP; B200 MAT'L; ALUMINIUM
BRK'T;B2036 MAT'L; STEEL
PLATING; NICKEL
TERMINAL; T146 ; T146
MATERIAL; BRASS

ELMWOOD DEVICE & UNIQUE PART No.
2455RP-9100-435

ELMWOOD DRG No.
965203

ISSUE
B

[redacted]

[illegible] ISSUE STAMP