Chipsmall Limited consists of a professional team with an average of over 10 year of expertise in the distribution of electronic components. Based in Hongkong, we have already established firm and mutual-benefit business relationships with customers from,Europe,America and south Asia,supplying obsolete and hard-to-find components to meet their specific needs.

With the principle of “Quality Parts,Customers Priority,Honest Operation,and Considerate Service”,our business mainly focus on the distribution of electronic components. Line cards we deal with include Microchip,ALPS,ROHM,Xilinx,Pulse,ON,Everlight and Freescale. Main products comprise IC,Modules,Potentiometer,IC Socket,Relay,Connector.Our parts cover such applications as commercial,industrial, and automotives areas.

We are looking forward to setting up business relationship with you and hope to provide you with the best service and solution. Let us make a better world for our industry!

Contact us

Tel: +86-755-8981 8866 Fax: +86-755-8427 6832
Email & Skype: info@chipsmall.com Web: www.chipsmall.com
Address: A1208, Overseas Decoration Building, #122 Zhenhua RD., Futian, Shenzhen, China

DESCRIPTION:	F-59T TERMINATOR 1/4 WATT 5%
MODEL NUMBER:	25-7100
APPLICATION:	TERMINATOR
CRIMP TOOL:	N/A
IMPEDANCE:	75 OHMS
FREQUENCY RANGE:	0-750 MHz
MATERIAL:	BODY BRASS NICKEL PLATED
	RESISTANCE 75Ω 1/4W
RoHS COMPLIANCE:	YES
TECHNICAL DETAIL:	REFER TO CINCH DOCUMENT P/N 25-0000

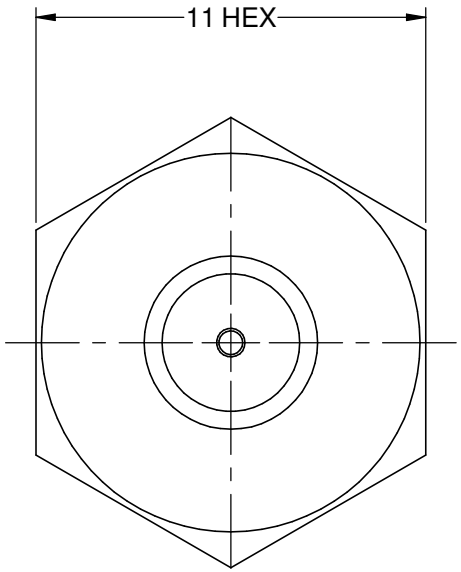

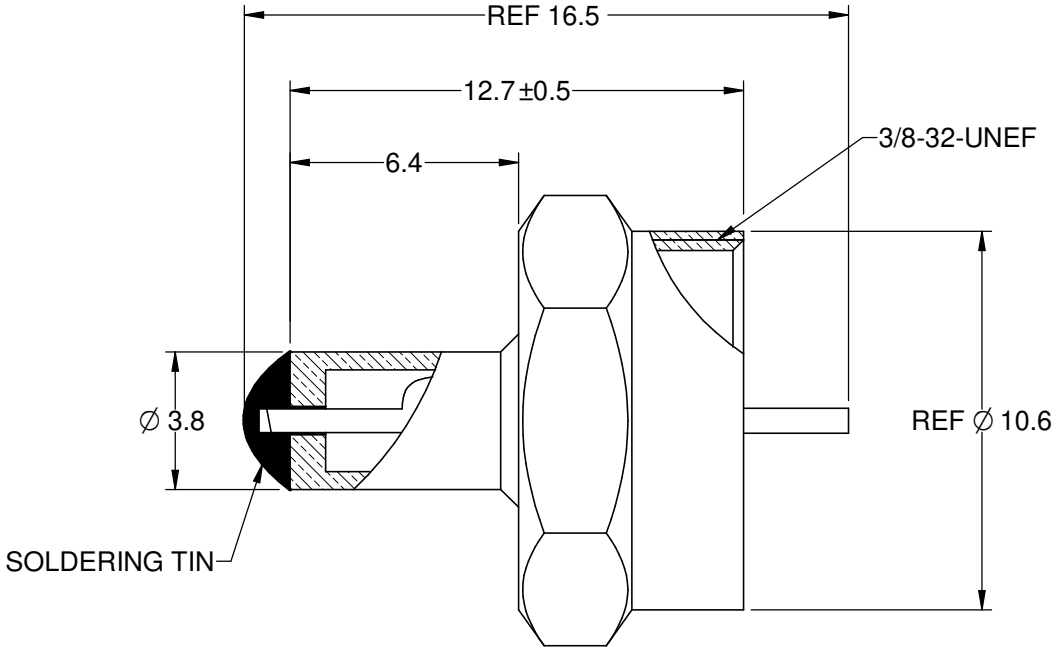

数字签名人: Lin Ma
DN : cn=Lin Ma c=CN , o=Cinch Connectivity Solutions (Shanghai) Co. Ltd email=lin.ma@cci.cinch.com
日期 : 2015.07.07 16:08:42 +08'00'

cinch CONNECTIVITY SOLUTIONS a bel group

This PROPRIETARY Document is property of Cinch Connectivity Solutions. It is confidential in nature, non-transferable, and issued with the clear understanding that it is not traced or copied without permission and is returnable upon demand.

INTERPRET DRAWING IN ACCORDANCE WITH ASME Y14.5-2009.

3RD ANGLE PROJECTION

RoHS2 ☑ 2011/65/EU

UNLESS OTHERWISE SPECIFIED UNITS: METRIC
.X ±.3
.XX ±.10
ANGLES ±2°

AIM-Cambridge

Title: (CPF59T) F Type Plug Termination for RG59

Model No. 25-7100

Size	DO NOT SCALE DRAWING	Date:	Sheet 1 of 1
A		2015/6/26	