Chipsmall Limited consists of a professional team with an average of over 10 year of expertise in the distribution of electronic components. Based in Hongkong, we have already established firm and mutual-benefit business relationships with customers from,Europe,America and south Asia,supplying obsolete and hard-to-find components to meet their specific needs.

With the principle of “Quality Parts,Customers Priority,Honest Operation,and Considerate Service”,our business mainly focus on the distribution of electronic components. Line cards we deal with include Microchip,ALPS,ROHM,Xilinx,Pulse,ON,Everlight and Freescale. Main products comprise IC,Modules,Potentiometer,IC Socket,Relay,Connector.Our parts cover such applications as commercial,industrial, and automotives areas.

We are looking forward to setting up business relationship with you and hope to provide you with the best service and solution. Let us make a better world for our industry!

Contact us

Tel: +86-755-8981 8866 Fax: +86-755-8427 6832
Email & Skype: info@chipsmall.com Web: www.chipsmall.com
Address: A1208, Overseas Decoration Building, #122 Zhenhua RD., Futian, Shenzhen, China

MATERIALS

1-BODY-BRASS-BRIGHT NI-PLATE.
2-INSULATOR-PAPER BASE PHENOLIC.
3-CORD PROTECTOR SLEEVE-MUSIC WIRE-TINNED.
4-EYELET-BRASS-HOT TINNED.
5-SET SCREW-STEEL-NI-PLATE.

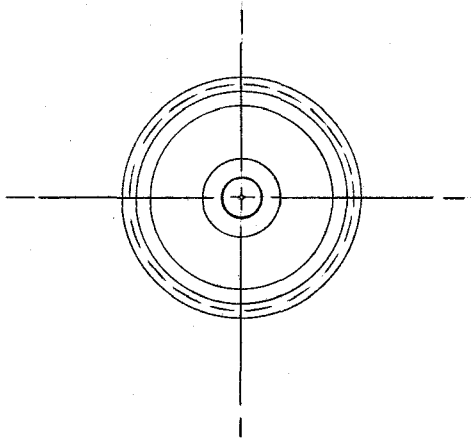

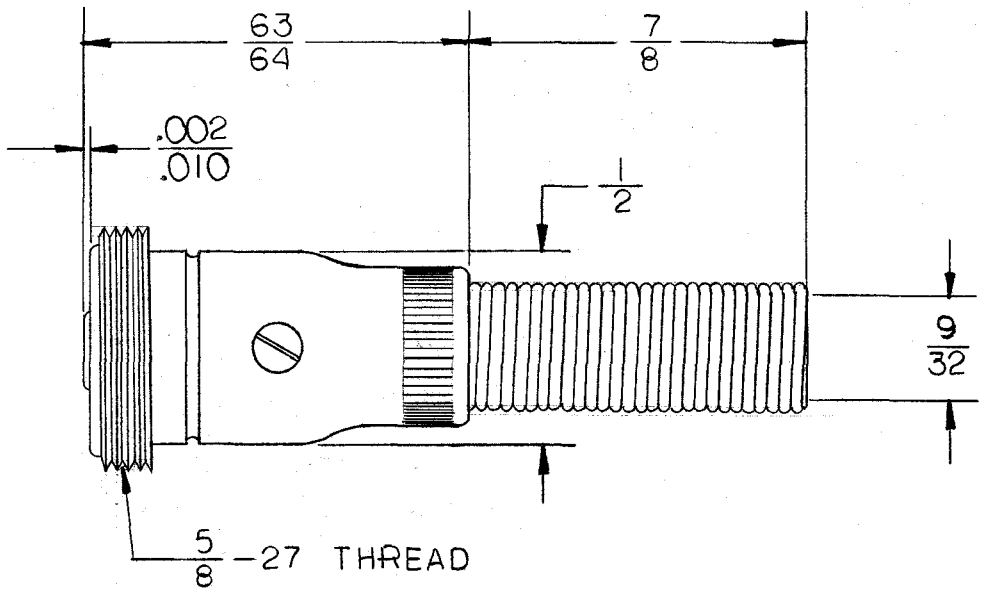

☆ STAR SYMBOL DENOTES CRITICAL DIMENSION, SEE S/C ENGINEERING STANDARD ES-0001.

SIZE	WIDTH	MULT.	LBS. PER M	TEMPER

ISS	SYM	REVISION	BY	DATE
A		REDRAWN ECO 16414	VL	1-22-91

THIS DRAWING DESCRIBES A DESIGN CONSIDERED PROPRIETARY IN NATURE, DEVELOPED AND MANUFACTURED BY SWITCHCRAFT, INC., AND IS RELEASED ON A CONFIDENTIAL BASIS FOR IDENTIFICATION PURPOSE ONLY.

UNLESS OTHERWISE SPECIFIED:

1 - DECIMAL DIMENSIONS ± .005
2 - FRACTIONAL DIMENSIONS ± 1/64
3 - ANGLES ± 1/2°
4 - ALL DIA'S CONCENTRIC WITHIN .005 T.I.R.
5 - ALL DIMENSIONS IN INCHES
6 - FOR THREADS USE UNIFIED PLUG AND RING GAGES ONLY.
7 - REMOVE ALL BURRS.
8 - PART TO BE FABRICATED AS SPECIFIED. MAKE NO DIMENSIONAL ALLOWANCES FOR APPLIED FINISHES, I.E., PLATING, PAINTING, ETC.
9 - HOLES ON SAME CENTERLINE MUST BE ALIGNED WITHIN ± .002

DO NOT SCALE DRAWING

DRAWN BY: H C J	DATE: 12-29-75	FINISH
CHECKED BY: W.H.	DATE: 12-31-75	PER FINISH SPEC. NO.
APPROVED BY	DATE	MATERIAL
SCALE: (2X)		PER MAT. SPEC. NO.
FIRST USED ON		SWITCHCRAFT
NAME: SINGLE CONTACT MICROPHONE CONNECTOR MALE TYPE	PART NO. 2501M	ISSUE A
	SHEET OF	

ROUTING 112 116

PAXTON