Chipsmall Limited consists of a professional team with an average of over 10 year of expertise in the distribution of electronic components. Based in Hongkong, we have already established firm and mutual-benefit business relationships with customers from,Europe,America and south Asia,supplying obsolete and hard-to-find components to meet their specific needs.

With the principle of “Quality Parts,Customers Priority,Honest Operation,and Considerate Service”,our business mainly focus on the distribution of electronic components. Line cards we deal with include Microchip,ALPS,ROHM,Xilinx,Pulse,ON,Everlight and Freescale. Main products comprise IC,Modules,Potentiometer,IC Socket,Relay,Connector.Our parts cover such applications as commercial,industrial, and automotives areas.

We are looking forward to setting up business relationship with you and hope to provide you with the best service and solution. Let us make a better world for our industry!

Contact us

Tel: +86-755-8981 8866 Fax: +86-755-8427 6832
Email & Skype: info@chipsmall.com Web: www.chipsmall.com
Address: A1208, Overseas Decoration Building, #122 Zhenhua RD., Futian, Shenzhen, China

DWG. SIZE	DWG. NO.
D	031–5001

REVISIONS

SYM.	E.C.N.	DATE	APVD.
A	24470	1/3/2001	
	REDRAWN ON CAD		

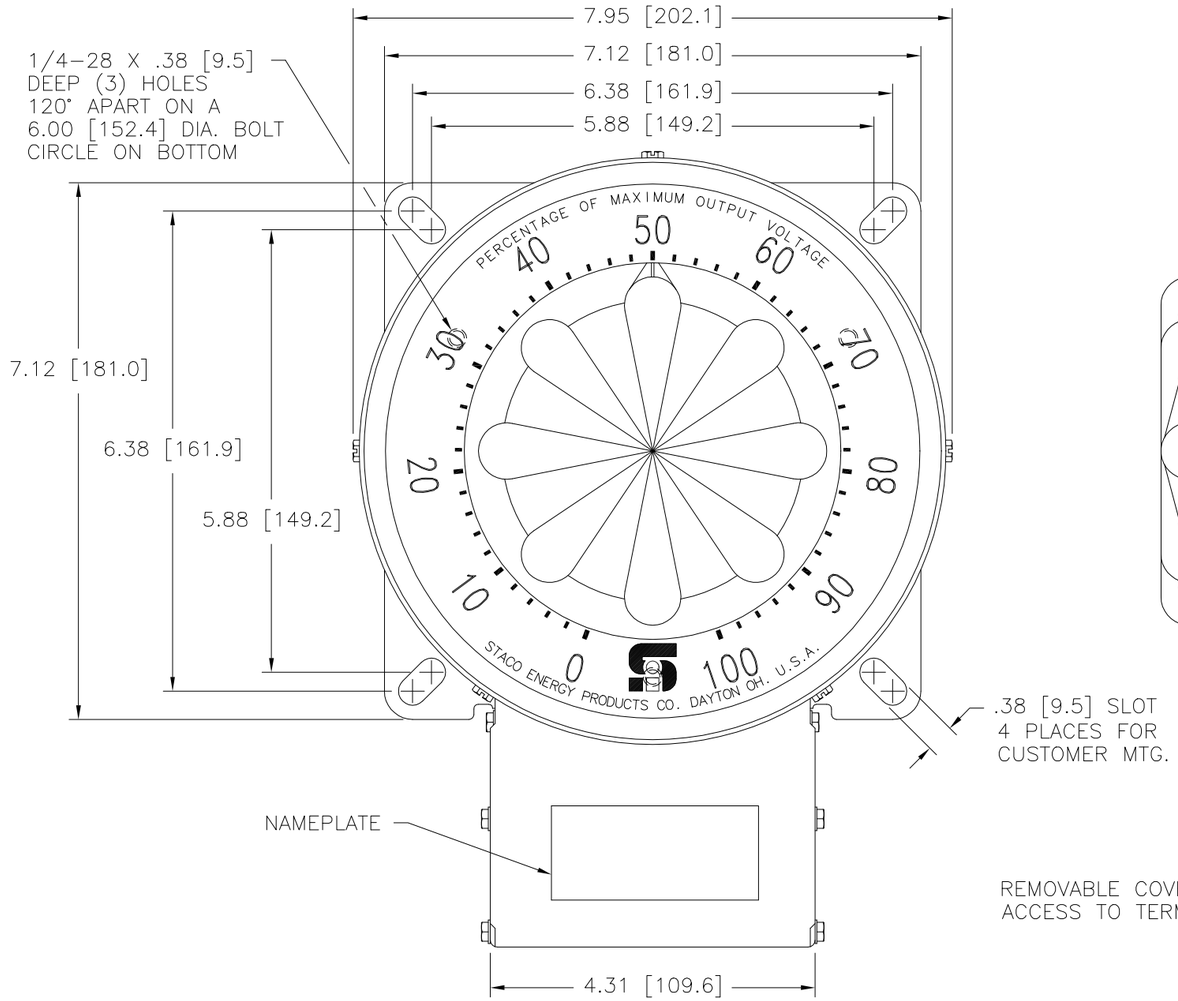

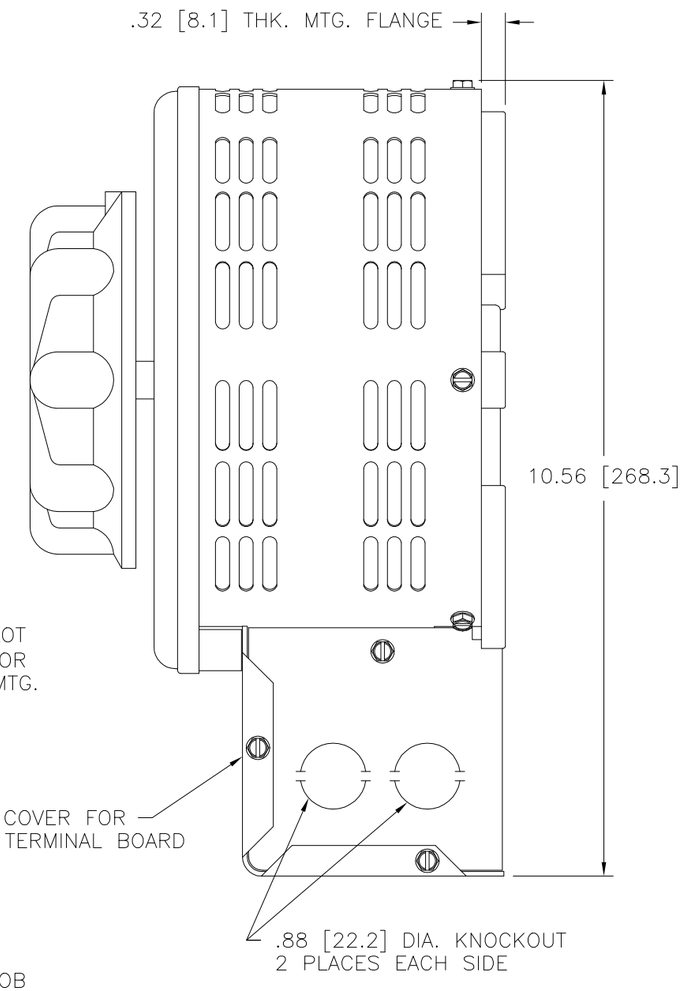

NOTE:
UNIT IS SUPPLIED WITH A 7.00 [177.8] DIA. 0–100 GRADUATED DIAL PLATE FOR PANEL MOUNTING.

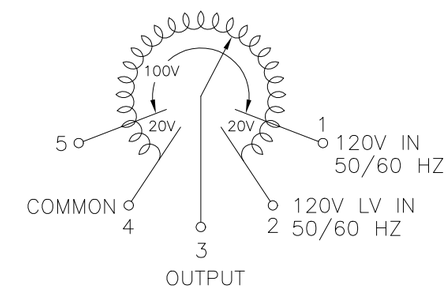

COIL SCHEMATIC
AS VIEWED FROM BASE END
FUSE RECOMMENDED BUT NOT SUPPLIED

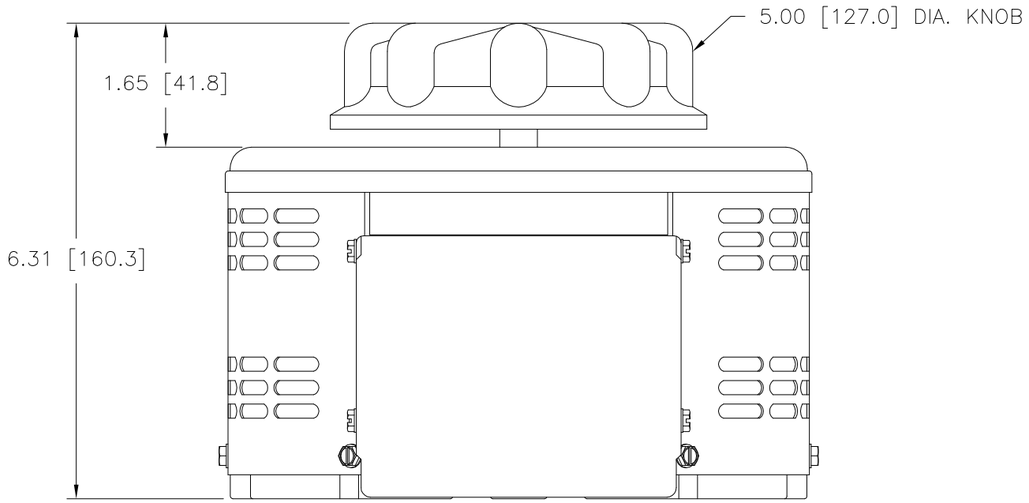

SPECIFICATIONS

WIRING	INPUT VOLTS	INPUT HERTZ	OUTPUT VOLTS	CONSTANT CURRENT LOAD MAX. AMPS	CONSTANT CURRENT LOAD MAX. KVA	CONSTANT IMPEDANCE LOAD MAX. AMPS	CONSTANT IMPEDANCE LOAD MAX. KVA	SHAFT ROTATION TO INCREASE VOLTAGE	TERMINAL CONNECTIONS FOR INCREASING VOLTAGE AS VIEWED FROM BASE END: INPUT	JUMPER	OUTPUT
SINGLE PHASE	120	50/60	0–120	25	3.00	30	3.6	CW	2–4	——	4–3
								CCW	2–4	——	2–3
			0–140	25	3.50	——	——	CW	1–4	——	4–3
								CCW	2–5	——	2–3

UNLESS OTHERWISE SPECIFIED. TOLERANCE IS ±
DECIMALS .XX .XXX .005 — HOLES .06 .01 — ANGLES 1° — DRAFT 1–1/2°

UNITS IN [mm]

ALL DIMENSIONS APPLY AFTER PLATING

MATERIAL :

TITLE: SPEC. CONTROL DRAWING VARIABLE TRANSFORMER MODEL: 2510CT

STACO ENERGY PRODUCTS CO.
A COMPONENTS CORPORATION OF AMERICA COMPANY
DAYTON, OHIO U.S.A.

The information and design disclosed herein was originated by and is the property of STACO ENERGY PRODUCTS CO., which reserves all patent, proprietary, design, manufacturing, reproduction, use and sale rights thereto, and to any article disclosed therein except to the extent rights are expressly granted to others. The foregoing does not apply to vendor proprietary parts.

DRAWN BY	DATE	FIRST USED ON	DO NOT SCALE DWG.	CUSTOMER APPROVAL	DATE
S.A. SMITH	1/3/2001	2510CT			
CHECKER	DATE	WEIGHT APPROX. 21 LBS	CODE IDENT. NO. 83008	DWG. SIZE D	DWG. NO. 031–5001
ENGINEER	DATE	SCALE 1=1	SHEET 1 OF 1		