Chipsmall Limited consists of a professional team with an average of over 10 year of expertise in the distribution of electronic components. Based in Hongkong, we have already established firm and mutual-benefit business relationships with customers from,Europe,America and south Asia,supplying obsolete and hard-to-find components to meet their specific needs.

With the principle of “Quality Parts,Customers Priority,Honest Operation,and Considerate Service”,our business mainly focus on the distribution of electronic components. Line cards we deal with include Microchip,ALPS,ROHM,Xilinx,Pulse,ON,Everlight and Freescale. Main products comprise IC,Modules,Potentiometer,IC Socket,Relay,Connector.Our parts cover such applications as commercial,industrial, and automotives areas.

We are looking forward to setting up business relationship with you and hope to provide you with the best service and solution. Let us make a better world for our industry!

Contact us

Tel: +86-755-8981 8866 Fax: +86-755-8427 6832
Email & Skype: info@chipsmall.com Web: www.chipsmall.com
Address: A1208, Overseas Decoration Building, #122 Zhenhua RD., Futian, Shenzhen, China

THIS DRAWING IS UNPUBLISHED. RELEASED FOR PUBLICATION 2003
© COPYRIGHT 2003 BY TYCO ELECTRONICS CORPORATION. ALL RIGHTS RESERVED.

LOC	DIST
1	-

REVISIONS

P	LTR	DESCRIPTION	DATE	DWN	APVD
	A	FIRST ISSUE(PRIMA EMISSIONE) ET00-0112-03	18JUL2003	M.P.	O.C.
	B1	ADDED TIE SLOT (WAS 03-51169)ET00-0159-03	10SEP2003	M.P.	O.C.
	B2	RELEASED FOR PRODUCTION (ET00-0059-04)	29APR2004	M.P.	O.C.

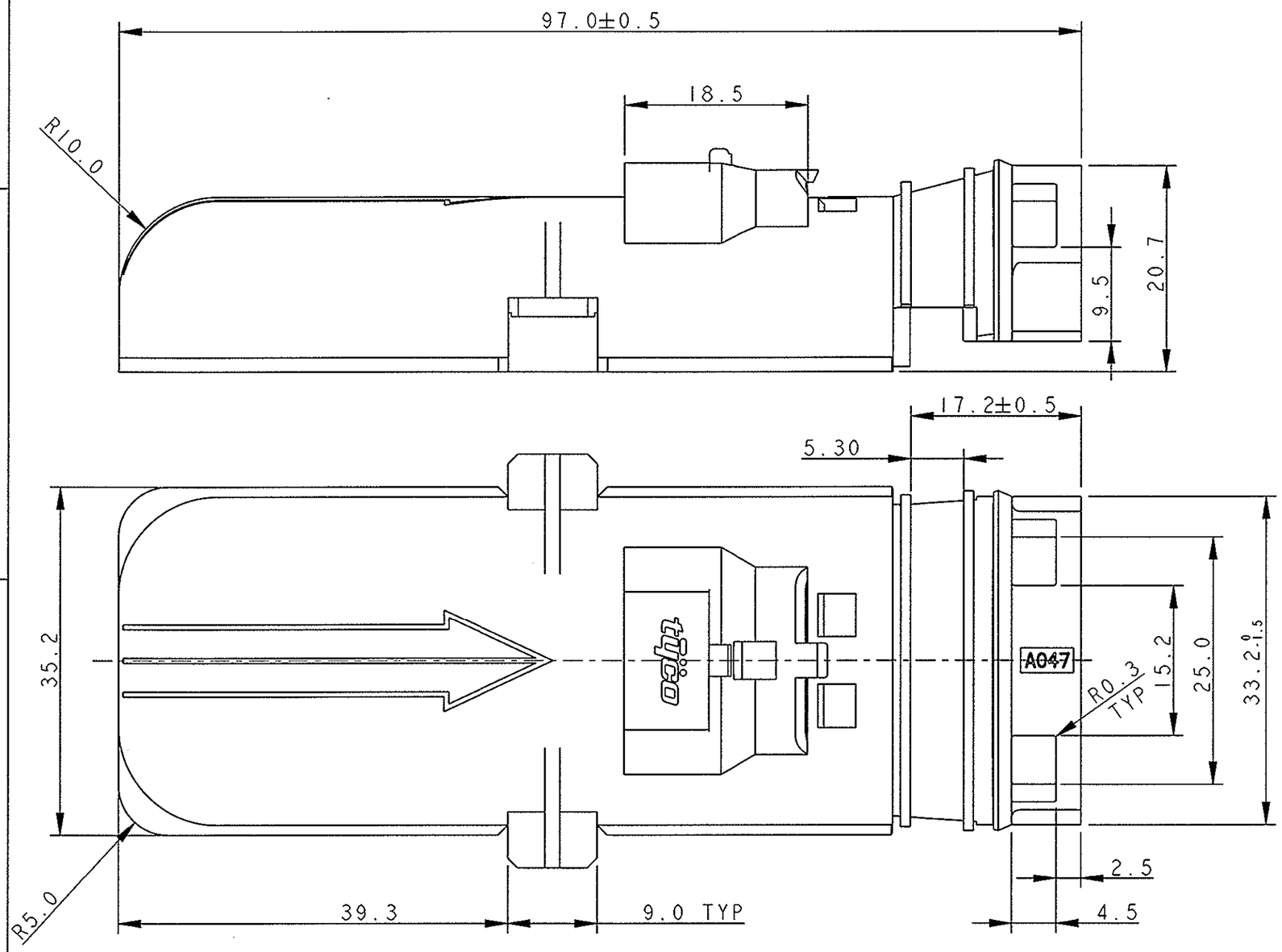

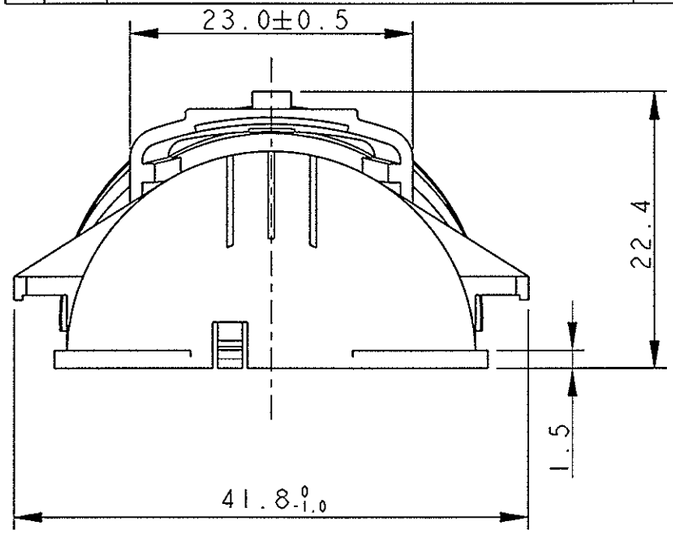

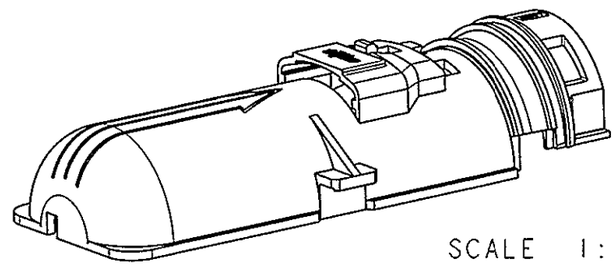

SCALE 1:1

284722-1 AS SHOWN

NOTES

1) COVER IS SUITABLE TO BE ASSEMBLED WITH TYCO CONNECTOR P/N 3-1355136-3 AND TYCO C.P.A
(IL COPERCHIO SI ASSEMBLA CON IL CONNETTORE TYCO P/N 3-1355136-3 E IL C.P.A. DI TYCO)

2) MATERIAL : PA6.6 GF BLACK COLOUR
(MATERIALE : PA 6.6 FV COLORE NERO)

THIS DRAWING IS A CONTROLLED DOCUMENT FOR TYCO ELECTRONICS CORPORATION IT IS SUBJECT TO CHANGE AND THE CONTROLLING ENGINEERING ORGANIZATION SHOULD BE CONTACTED FOR THE LATEST REVISION.

DIMENSIONS: mm

TOLERANCES UNLESS OTHERWISE SPECIFIED:

0 PLC	±0.3
1 PLC	±0.3
2 PLC	±0.3
3 PLC	±-
4 PLC	±-
ANGLES	±1°

MATERIAL 2

FINISH 2

DWN	M. POLIZZI	25JUN2003
CHK	O. CANUTO	25JUN2003
APVD	A. GENTA	25JUN2003
PRODUCT SPEC	108-20235	
APPLICATION SPEC	I.S. 411-20067	
WEIGHT	-	

CUSTOMER DRAWING

tyco Electronics

tyco Electronics AMP Italia
C.so Fratelli Cervi, 15 Collegno (To)

NAME
COVER FOR 94 POS. RECEPTACLE HOUSING
Coperchio per connettore femmina
94 vie

SIZE	CAGE CODE	DRAWING NO	RESTRICTED TO
A3	00779	C-284722	-

SCALE 2:1 SHEET 1 OF 1 REV B2