Chipsmall Limited consists of a professional team with an average of over 10 year of expertise in the distribution of electronic components. Based in Hongkong, we have already established firm and mutual-benefit business relationships with customers from,Europe,America and south Asia,supplying obsolete and hard-to-find components to meet their specific needs.

With the principle of “Quality Parts,Customers Priority,Honest Operation,and Considerate Service”,our business mainly focus on the distribution of electronic components. Line cards we deal with include Microchip,ALPS,ROHM,Xilinx,Pulse,ON,Everlight and Freescale. Main products comprise IC,Modules,Potentiometer,IC Socket,Relay,Connector.Our parts cover such applications as commercial,industrial, and automotives areas.

We are looking forward to setting up business relationship with you and hope to provide you with the best service and solution. Let us make a better world for our industry!

Contact us

Tel: +86-755-8981 8866 Fax: +86-755-8427 6832
Email & Skype: info@chipsmall.com Web: www.chipsmall.com
Address: A1208, Overseas Decoration Building, #122 Zhenhua RD., Futian, Shenzhen, China

THIS DOCUMENT IS THE PROPERTY OF KEYSTONE ELECTRONICS CORP. AND SHALL NOT BE REPRODUCED, DISTRIBUTED OR USED AS A BASIS FOR MANUFACTURE WITHOUT PRIOR WRITTEN PERMISSION FROM KEYSTONE ELECTRONICS CORP.

ACTUAL SIZE

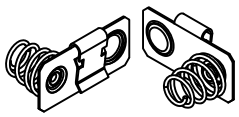

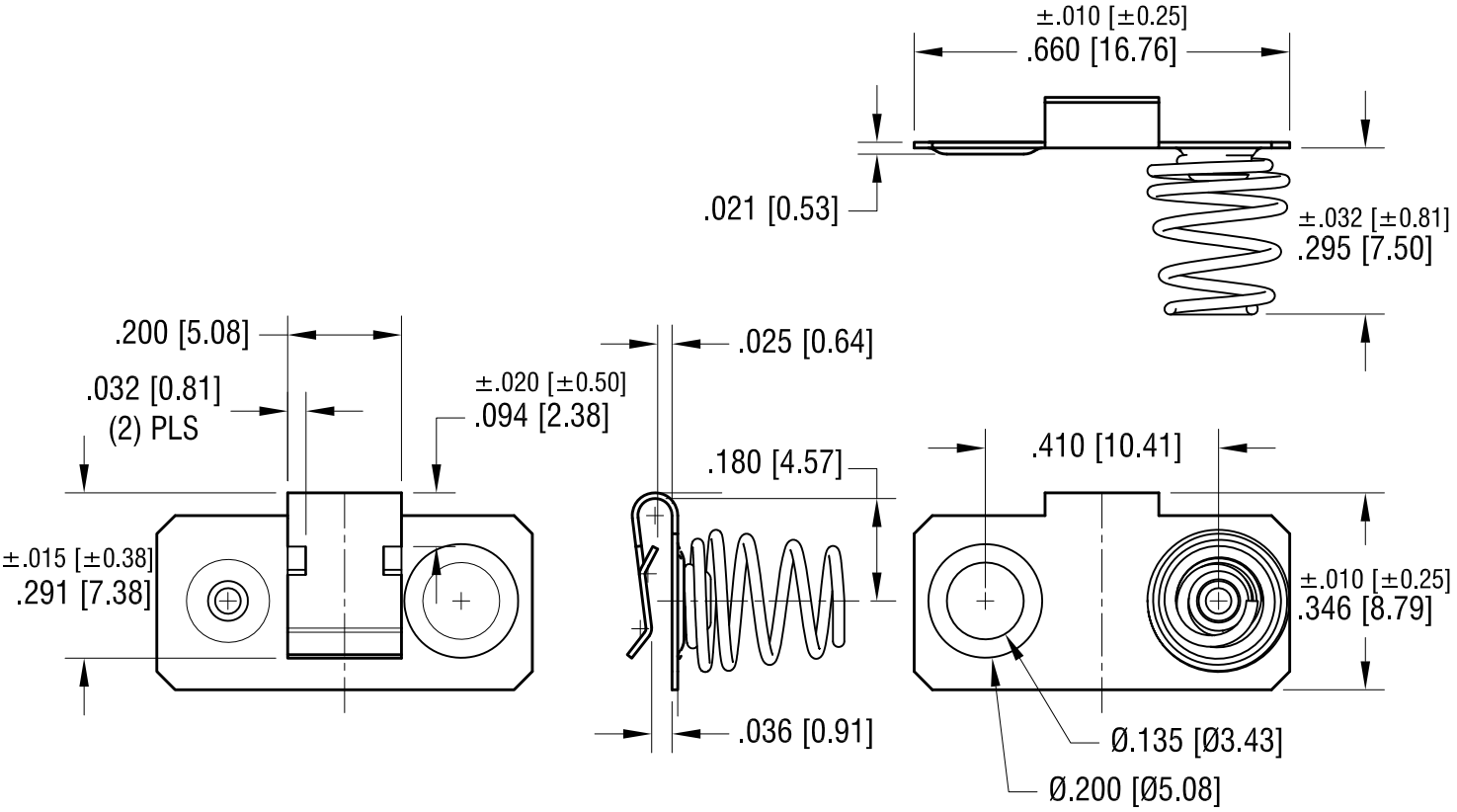

1. BASE:
   MAT'L - .010 [0.25] TH'K SPRING STEEL
2. SPRING CONTACT:
   MAT'L - .020 [0.50] DIA. MUSIC WIRE
3. SPRING EYELETED TO BASE

DATE	DESCRIPTION	REV.

KEYSTONE ELECTRONICS CORP.

www.keyelco.com • NEW HYDE PARK, NY 11040 • Tel (516) 328-7500

PART NAME: DUAL SPRING CONTACT, 'AAA' - 'AAAA'			
MATERIAL: AS NOTED			
FINISH: NICKEL PLATE	DRN BY: NT	DATE: 10.25.17	
	APP'D: LN	SCALE: 3X	
TOLERANCES INCH [MM] DECIMAL ± .005 [± 0.13] ANGULAR ± 1° UNLESS OTHERWISE SPECIFIED	CODE: C	DWG NO. 287	