Chipsmall Limited consists of a professional team with an average of over 10 year of expertise in the distribution of electronic components. Based in Hongkong, we have already established firm and mutual-benefit business relationships with customers from,Europe,America and south Asia,supplying obsolete and hard-to-find components to meet their specific needs.

With the principle of “Quality Parts,Customers Priority,Honest Operation,and Considerate Service”,our business mainly focus on the distribution of electronic components. Line cards we deal with include Microchip,ALPS,ROHM,Xilinx,Pulse,ON,Everlight and Freescale. Main products comprise IC,Modules,Potentiometer,IC Socket,Relay,Connector.Our parts cover such applications as commercial,industrial, and automotives areas.

We are looking forward to setting up business relationship with you and hope to provide you with the best service and solution. Let us make a better world for our industry!

Contact us

Tel: +86-755-8981 8866 Fax: +86-755-8427 6832
Email & Skype: info@chipsmall.com Web: www.chipsmall.com
Address: A1208, Overseas Decoration Building, #122 Zhenhua RD., Futian, Shenzhen, China

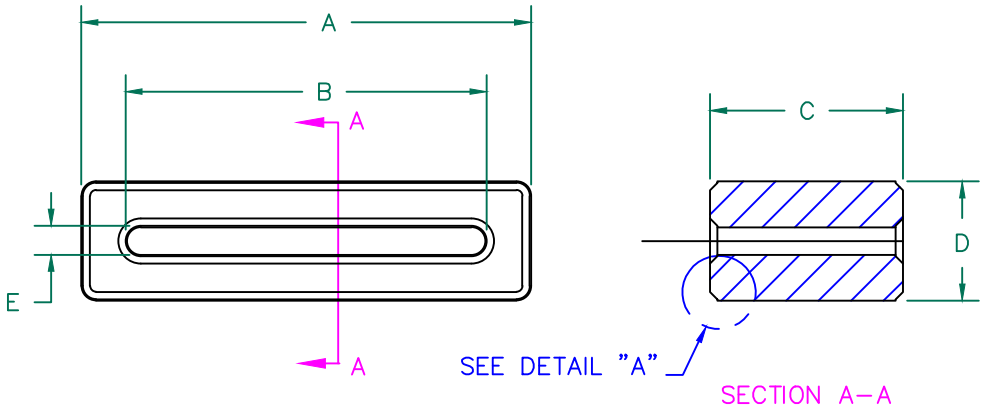

IMPEDANCE (Z)			
Frequency	25 MHz	100 MHz	300 MHz
Nominal (REF)	52 Ω	128 Ω	300 Ω
Minimum	- Ω	109 Ω	- Ω

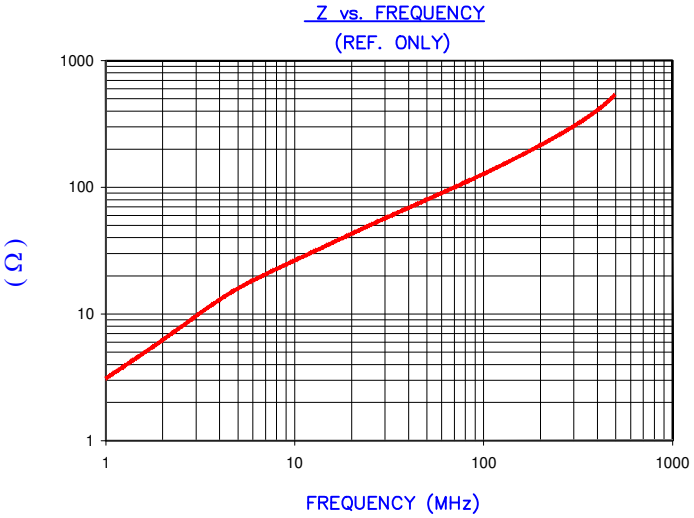

AGILENT E4991A Impedance/Material Analyzer
HP 16092A Test Fixture, REF #2973

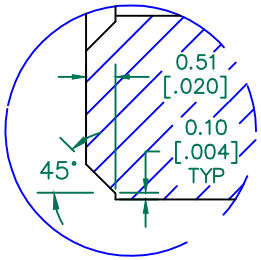

DETAIL "A"
CHAMFER
SCALE=6:1

UNCONTROLLED DOCUMENT

FERRITE CORE DIMENSIONS (SPEC): mm[Inches]

A	31.12 [1.225]	±	0.51 [.020]
B	24.77 [.975]	±	0.51 [.020]
C	13.3 [.525]	±	0.25 [.010]
D	8.26 [.325]	±	0.38 [.015]
E	1.91 [.075]	+ / −	0.38 [.015] / 0.20 [.008]

WEIGHT/1000 13.60 kgs [29.99 Lbs]

NOTES: UNLESS OTHERWISE SPECIFIED

1. COSMETIC SPECIFICATION REFER TO WI–QA–038.

SCALE DRAWING 1:1

28R1227–100

RoHS

DIMENSIONS ARE IN MM [INCHES].

REV	DESCRIPTION	DATE	INT
G	UPDATE THE LOGO	05/29/15	QIU
F	CHANGE E DIMENSION TOLERANCE	10/15/09	Jcai
E	UPDATE MIN Z SPEC	10/19/06	JRK
D	UPDATE MIN Z SPEC @100 MHZ, ADD TEST REF	02/03/04	JRK
C	UPDATE FORMAT CURVE & Z SPECS	05/05/03	JRK
B	UPDATE TO NEW CNZ FORMAT	06/11/02	JRK
A	ORIGINAL DRAFT	01/29/99	DTR

This print is the property of Laird Tech. and is loaned in confidence subject to return upon request and with the understanding that no copies shall be made without the written consent of Laird Tech. All rights to design or invention are reserved.

Laird

PROJECT/PART NUMBER:	REV	PART TYPE:	DRAWN BY:
28R1227–100	G	CNZ CORE	DTR
DATE: 01/29/99	SCALE: 2 : 1		MATERIAL: Ferrite
CAD # 28R1227–100–G	TOOL # R1227		