Chipsmall Limited consists of a professional team with an average of over 10 year of expertise in the distribution of electronic components. Based in Hongkong, we have already established firm and mutual-benefit business relationships with customers from,Europe,America and south Asia,supplying obsolete and hard-to-find components to meet their specific needs.

With the principle of “Quality Parts,Customers Priority,Honest Operation,and Considerate Service”,our business mainly focus on the distribution of electronic components. Line cards we deal with include Microchip,ALPS,ROHM,Xilinx,Pulse,ON,Everlight and Freescale. Main products comprise IC,Modules,Potentiometer,IC Socket,Relay,Connector.Our parts cover such applications as commercial,industrial, and automotives areas.

We are looking forward to setting up business relationship with you and hope to provide you with the best service and solution. Let us make a better world for our industry!

Contact us

Tel: +86-755-8981 8866 Fax: +86-755-8427 6832
Email & Skype: info@chipsmall.com Web: www.chipsmall.com
Address: A1208, Overseas Decoration Building, #122 Zhenhua RD., Futian, Shenzhen, China

THIS DRAWING IS UNPUBLISHED. RELEASED FOR PUBLICATION ,19 .
© COPYRIGHT 19 BY AMP INCORPORATED. ALL RIGHTS RESERVED.

LOC	DIST
ES	00

REVISIONS

P	LTR	DESCRIPTION	DATE	DWN	APVD
	D2	REVISED ECR-08-018445	23JUL08	A.Z.	S.Y.

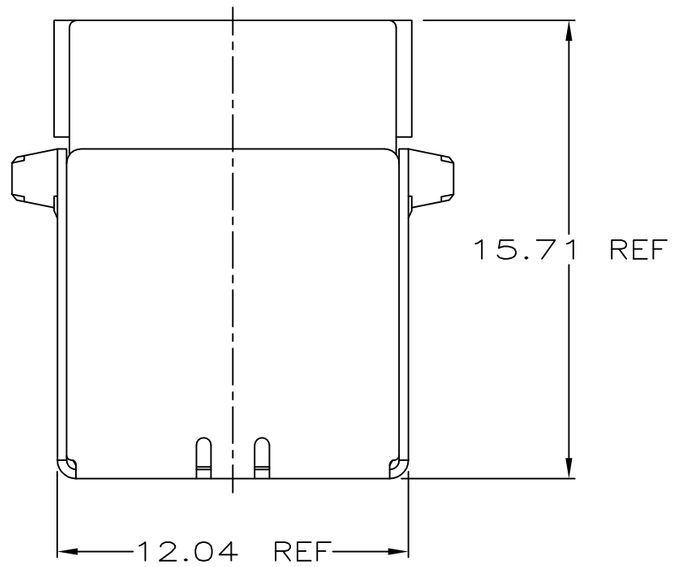

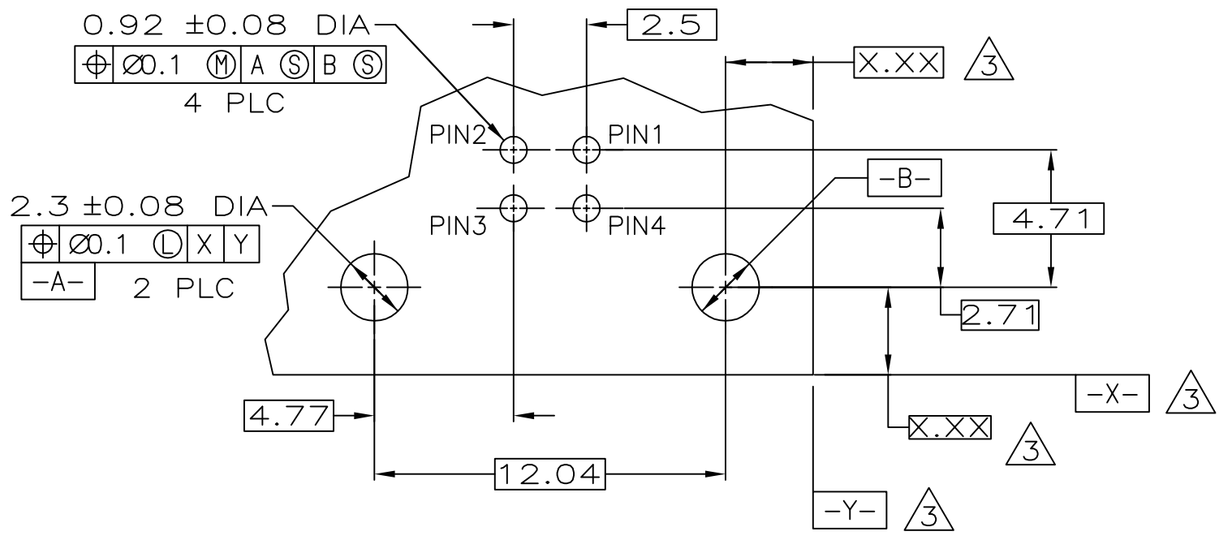

PC BOARD MOUNTING DIMENSIONS 4

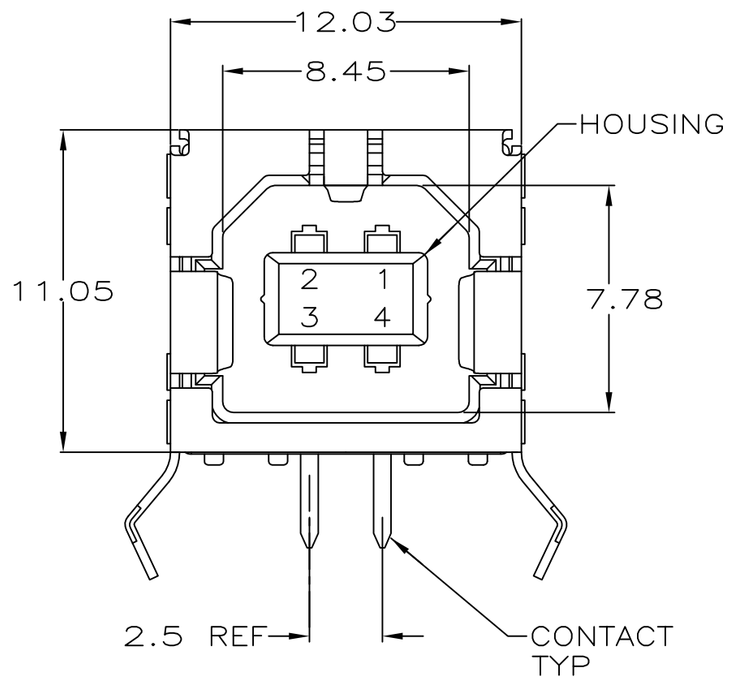

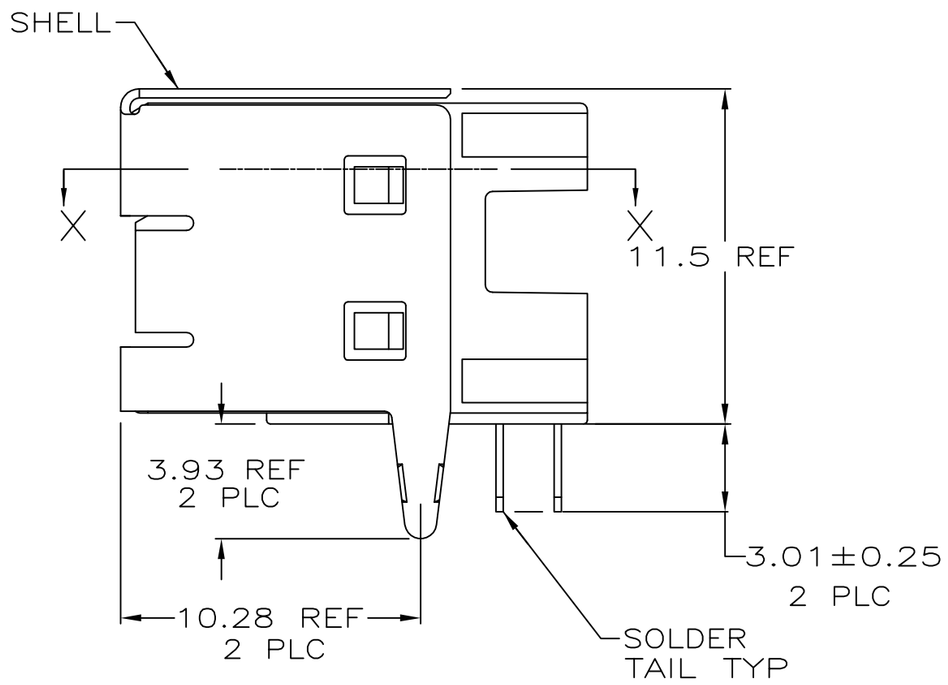

1 MATERIAL:
SHELL & CONTACTS: COPPER ALLOY.
HOUSING: UL 94V-0 RATED, THERMOPLASTIC, BLACK.

2 PLATING:
CONTACTS: 0.076μm MINIMUM GOLD OVER 0.76μm MINIMUM PALLADIUM-NICKEL ON MATING AREA.
3.8μm MINIMUM MATTE TIN ON SOLDER TAILS.
BOTH OVER 1.27μm MINIMUM NICKEL.
CONTACT ALTERNATE PLATING: 0.76μm MIN GOLD ON MATING AREA, 3.8μm MIN MATTE TIN ON SOLDER TAILS, BOTH OVER 1.27μm MIN NICKEL.
SHELL: 2.0~5.0μm MINIMUM TIN.

3 DATUM AND BASIC DIMENSIONS ESTABLISHED BY CUSTOMER.

4 RECOMMENDED PC BOARD THICKNESS OF 1.57.

5 PLATING:
CONTACTS: 0.76μm MINIMUM GOLD ON MATING AREA,
3.8μm MINIMUM MATTE TIN ON SOLDER TAILS,
BOTH OVER 1.27μm MINIMUM NICKEL.
SHELL: 2.0~5.0μm MINIMUM TIN.

6 PLATING:
CONTACTS: 0.38μm MINIMUM GOLD ON MATING AREA,
3.8μm MINIMUM MATTE TIN ON SOLDER TAILS,
BOTH OVER 1.27μm MINIMUM NICKEL.
SHELL: 2.0~5.0μm MINIMUM TIN.

7 RECOMMEND:
MATING FORCE: 35N MAX.
UNMATING FORCE: 13N MIN.
RECOMMENDED MATING PLUG SHOULD MEET USB2.0 STANDARD.

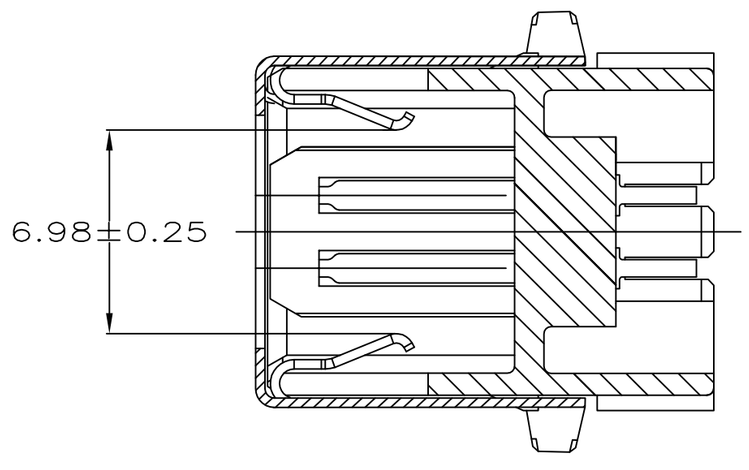

SECTION X-X

PLATING	HIGH TEMPERATURE COMPATIBLE	HOUSING COLOR	PART NUMBER
6	NO	BLACK	292304-5
5	NO	BLACK	292304-4
2	YES	BLACK	292304-3
2	YES	NATURAL	292304-2
2	NO	BLACK	292304-1

THIS DRAWING IS A CONTROLLED DOCUMENT FOR AMP INCORPORATED. IT IS SUBJECT TO CHANGE AND THE CONTROLLING ENGINEERING ORGANIZATION SHOULD BE CONTACTED FOR THE LATEST REVISION.

DIMENSIONS: mm

TOLERANCES UNLESS OTHERWISE SPECIFIED:
0 PLC ±-
1 PLC ±-
2 PLC ±0.1
3 PLC ±-
4 PLC ±-
ANGLES ±-

MATERIAL 1
FINISH 2

DWN J.JIANG 23FEB04
CHK S.YAO 23FEB04
APVD T.SASAKI 23FEB04
PRODUCT SPEC —
APPLICATION SPEC —
WEIGHT —

Tyco Electronics
Tyco electronics coporation
Shanghai, P.R.China, 200233

NAME
RECEPTACLE ASSEMBLY, RIGHT ANGLE,
4 POSITION, THRU-HOLE, TYPE B
UNIVERSAL SERIAL BUS, LEAD FREE VERSION

SIZE A2 | CAGE CODE 00779 | DRAWING NO C-292304

CUSTOMER DRAWING | SCALE 5:1 | SHEET 1 OF 1 | REV D2

292304