Chipsmall Limited consists of a professional team with an average of over 10 year of expertise in the distribution of electronic components. Based in Hongkong, we have already established firm and mutual-benefit business relationships with customers from,Europe,America and south Asia,supplying obsolete and hard-to-find components to meet their specific needs.

With the principle of “Quality Parts,Customers Priority,Honest Operation,and Considerate Service”,our business mainly focus on the distribution of electronic components. Line cards we deal with include Microchip,ALPS,ROHM,Xilinx,Pulse,ON,Everlight and Freescale. Main products comprise IC,Modules,Potentiometer,IC Socket,Relay,Connector.Our parts cover such applications as commercial,industrial, and automotives areas.

We are looking forward to setting up business relationship with you and hope to provide you with the best service and solution. Let us make a better world for our industry!

Contact us

Tel: +86-755-8981 8866 Fax: +86-755-8427 6832
Email & Skype: info@chipsmall.com Web: www.chipsmall.com
Address: A1208, Overseas Decoration Building, #122 Zhenhua RD., Futian, Shenzhen, China

THIS DRAWING IS UNPUBLISHED. RELEASED FOR PUBLICATION 20
© COPYRIGHT 20 BY TYCO ELECTRONICS CORPORATION. ALL RIGHTS RESERVED.

LOC	DIST
1	-

REVISIONS

P	LTR	DESCRIPTION	DATE	DWN	APVD
	0	FIRST EMISSION	07MAY2007	HY	GT
	1	CONFIRMING P/N	24JUL2007	HY	GT
	A	RELEASED	28NOV2007	HY	GT

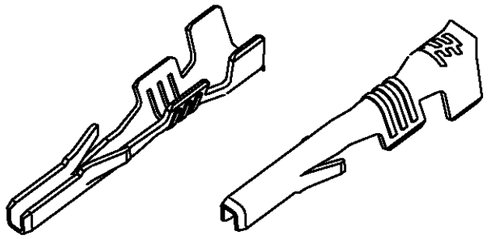

SCALE 3:1

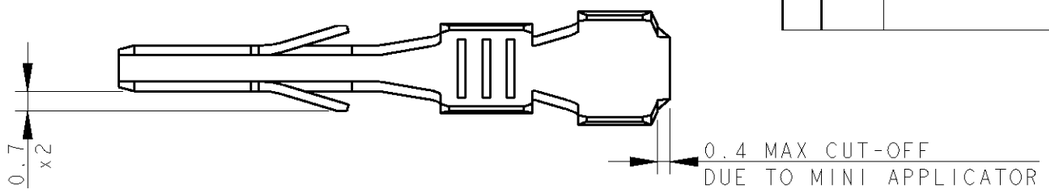

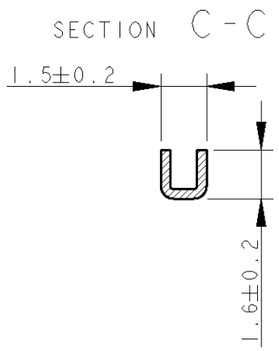

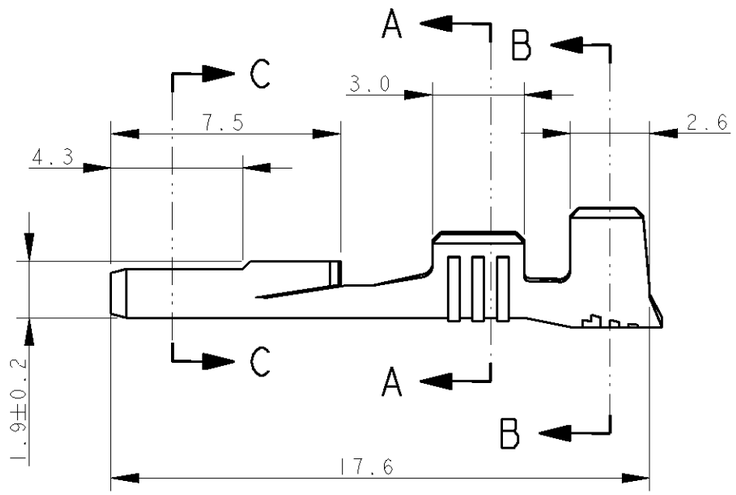

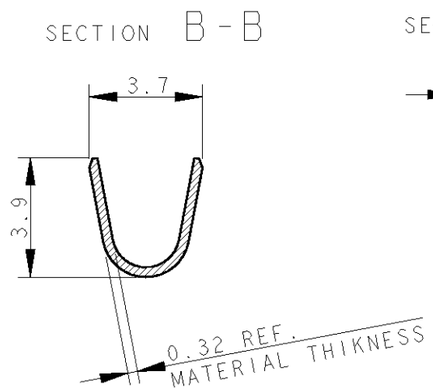

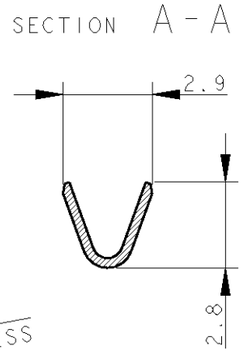

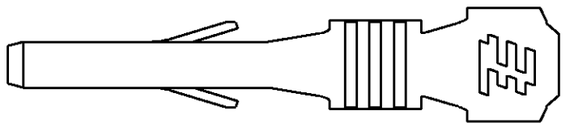

1) REELED ON 24" CARTON TYPE REEL P/N 1-781377-7
WITH INTERLEAVE PAPER STRIP P/N 782504-7,
Q.TY/REEL 3.000
CARTON BOX P/N 973051-1 CONTAINING 4 REELS.

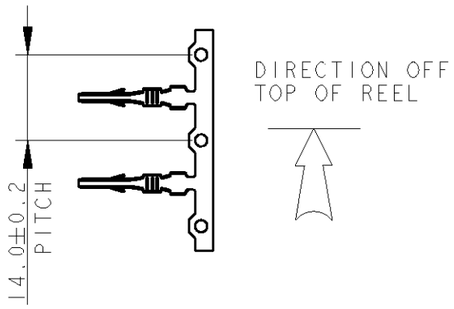

2) WIRE RANGE 0.3-0.8 sqmm
INSULATION RANGE 1.4-2.5 Ø

	PRE-TIN PLATED	BRASS	293322-1	A
NOTE	FINISH	MATERIAL	PART NO	REV

THIS DRAWING IS A CONTROLLED DOCUMENT FOR TYCO ELECTRONICS CORPORATION. IT IS SUBJECT TO CHANGE AND THE CONTROLLING ENGINEERING ORGANIZATION SHOULD BE CONTACTED FOR THE LATEST REVISION.

DIMENSIONS: mm

TOLERANCES UNLESS OTHERWISE SPECIFIED:
0 PLC ±-
1 PLC ±0.3
2 PLC ±-
3 PLC ±-
4 PLC ±-
ANGLES ±2°

MATERIAL SEE TABLE
FINISH SEE TABLE

DWN H. Yaali 07MAY2007
CHK -
APVD G. Turco -
PRODUCT SPEC -
APPLICATION SPEC -
WEIGHT -

Tyco Electronics
AMP Italia S.p.A.
C.so F.lli Cervi, 15 COLLEGNO (TO)

NAME CRIMPED TAB CONTACT P.C.B. INTERFACE -

SIZE	CAGE CODE	DRAWING NO	RESTRICTED TO
A3	00779	C-293322	-

CUSTOMER DRAWING | SCALE 5:1 | SHEET 1 OF 1 | REV A

AMP 1470-19 REV 31MAR2000

Pro/ENGINEER DRAWING