Chipsmall Limited consists of a professional team with an average of over 10 year of expertise in the distribution of electronic components. Based in Hongkong, we have already established firm and mutual-benefit business relationships with customers from,Europe,America and south Asia,supplying obsolete and hard-to-find components to meet their specific needs.

With the principle of “Quality Parts,Customers Priority,Honest Operation,and Considerate Service”,our business mainly focus on the distribution of electronic components. Line cards we deal with include Microchip,ALPS,ROHM,Xilinx,Pulse,ON,Everlight and Freescale. Main products comprise IC,Modules,Potentiometer,IC Socket,Relay,Connector.Our parts cover such applications as commercial,industrial, and automotives areas.

We are looking forward to setting up business relationship with you and hope to provide you with the best service and solution. Let us make a better world for our industry!

Contact us

Tel: +86-755-8981 8866 Fax: +86-755-8427 6832
Email & Skype: info@chipsmall.com Web: www.chipsmall.com
Address: A1208, Overseas Decoration Building, #122 Zhenhua RD., Futian, Shenzhen, China

MICRO SWITCH
A DIVISION OF MINNEAPOLIS-HONEYWELL REGULATOR COMPANY
FREEPORT ILLINOIS
FED. MFR CODE 91929

SWITCH—TOGGLE FLUSH KEY

CATALOG LISTING
2TP12 SERIES
CHART 1

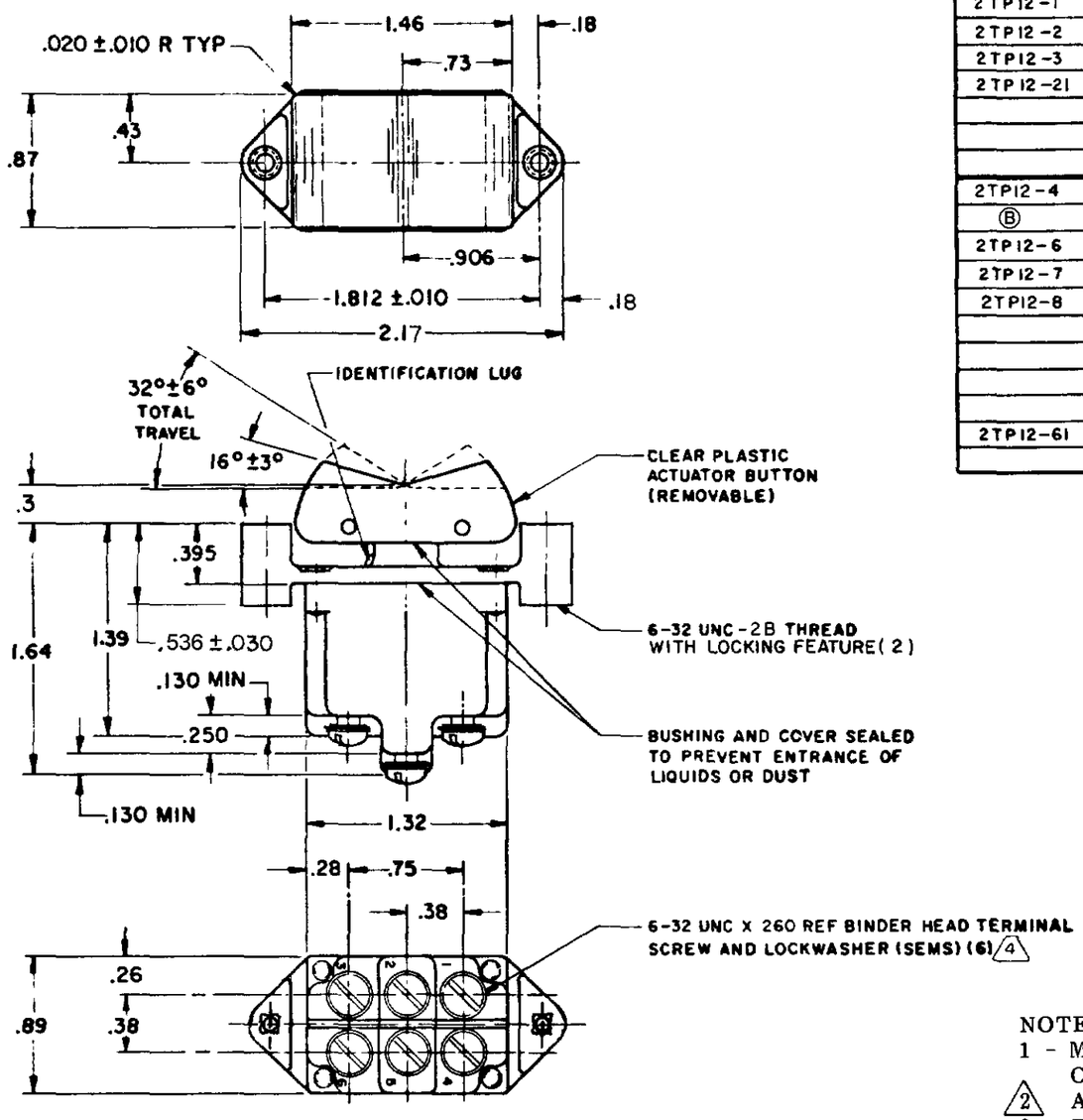

CAT. LIST.	2 CIRCUIT MADE WITH BUTTON DEPRESSED ON: OPPOSITE LUG (2-3, 5-6)	CENTER (1-2, 4-5)	LUG SIDE (1-2, 4-5)	
2TP12-1	ON	OFF	ON	L191 15A 125, 250, 277 VAC 1/2HP 125 VAC 1HP 250, 277 VAC 5A 125 VAC "L"
2TP12-2	ON	NONE	OFF	
2TP12-3	ON	NONE	ON	
2TP12-21	ON	OFF	NONE	
2TP12-4	ON	NONE	MOM OFF	L192 10A 125, 250, 277 VAC 1/4HP 125 VAC, 1/2HP 250, 277 VAC 3A 125 VAC "L"
(B)	ON	OFF	MOM ON	
2TP12-6	OFF	NONE	MOM ON	
2TP12-7	MOM ON	OFF	MOM ON	
2TP12-8	ON	NONE	MOM ON	
2TP12-61	NONE	OFF	MOM ON	

NOTES
1 - MICRO SWITCH CATALOG LISTING MARKED ON SIDE OF SWITCH
2 APPLIES ONLY TO "ON" AND "MOMENTARY ON" POSITIONS
3 - THESE SWITCHES WILL WITHSTAND TEMPERATURE OF 160°F
4 SCREWS FURNISHED UNASSEMBLED

THIS DRAWING COVERS A PROPRIETARY ITEM AND IS THE PROPERTY OF MICRO SWITCH A DIVISION OF MINNEAPOLIS-HONEYWELL REGULATOR CO. THIS DRAWING IS NOT TO BE COPIED OR USED WITHOUT THE APPROVAL OF MICRO SWITCH

CHARACTERISTICS	ELECTRICAL DATA	SCALE - FULL
	CONTACT ARRANGEMENT	DO NOT SCALE PRINT
		UNLESS OTHERWISE SPECIFIED DIMENSIONS ARE IN INCHES TOLERANCES ARE: ONE PLACE (0) ±.030; TWO PLACE (00) ±.015; THREE PLACE (000) ±.005; ANGLES ±°
		WEIGHT .14 LB EST

DRAWING NUMBER 2TP12 SERIES CHART 1 PAGE 1 OF 1
ISSUE M 17
RELEASE NO. SR 12719
REPLACES
REVISIONS
A CO-94413 J J A 8 OCT 99
B CO-95303 C S L 15 NOV 99
C 202714 C S L 3 APR 01
DRAWN H.B.W. 18 SEP 64
CHECK LSD 22 SEP 64
CHECK BRJ 22 SEP 64
CHECK 22 SEP 64
CHECK
RASTER
FO-50378 003