Chipsmall Limited consists of a professional team with an average of over 10 year of expertise in the distribution of electronic components. Based in Hongkong, we have already established firm and mutual-benefit business relationships with customers from,Europe,America and south Asia,supplying obsolete and hard-to-find components to meet their specific needs.

With the principle of “Quality Parts,Customers Priority,Honest Operation,and Considerate Service”,our business mainly focus on the distribution of electronic components. Line cards we deal with include Microchip,ALPS,ROHM,Xilinx,Pulse,ON,Everlight and Freescale. Main products comprise IC,Modules,Potentiometer,IC Socket,Relay,Connector.Our parts cover such applications as commercial,industrial, and automotives areas.

We are looking forward to setting up business relationship with you and hope to provide you with the best service and solution. Let us make a better world for our industry!

Contact us

Tel: +86-755-8981 8866 Fax: +86-755-8427 6832
Email & Skype: info@chipsmall.com Web: www.chipsmall.com
Address: A1208, Overseas Decoration Building, #122 Zhenhua RD., Futian, Shenzhen, China

THIS DRAWING IS UNPUBLISHED. RELEASED FOR PUBLICATION . .
© COPYRIGHT — BY — ALL RIGHTS RESERVED.

LOC	DIST
DY	-

REVISIONS

P	LTR	DESCRIPTION	DATE	DWN	APVD
	P	REVISED PER ECO-11-005139	19MAR11	RK	HMR

NOTES;

1. MATERIAL — HOUSING: THERMOPLASTIC, UL 94V-0.
   POST : BRASS
2. FINISH — CONTACT AREA, "D" MIN Au
   ON NICKEL 0.0013 MIN ALL OVER
   POST TINE: 0.002 MIN MATTE TIN
3. POST POSITION NUMBERS FOR REFERENCE ONLY.

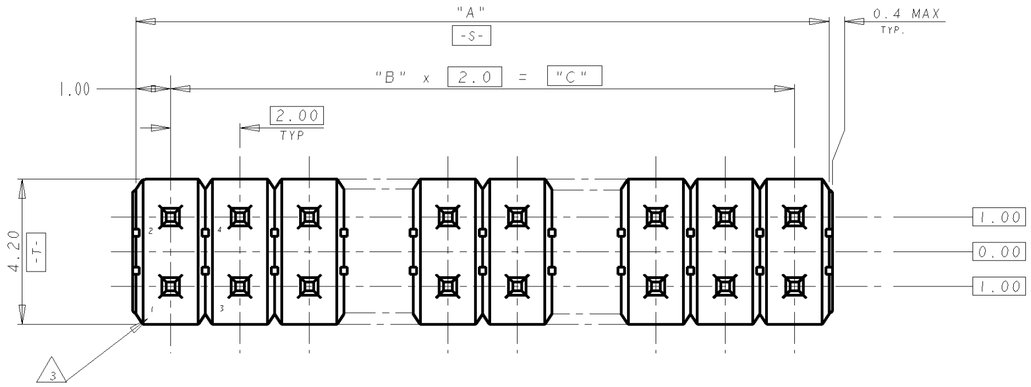

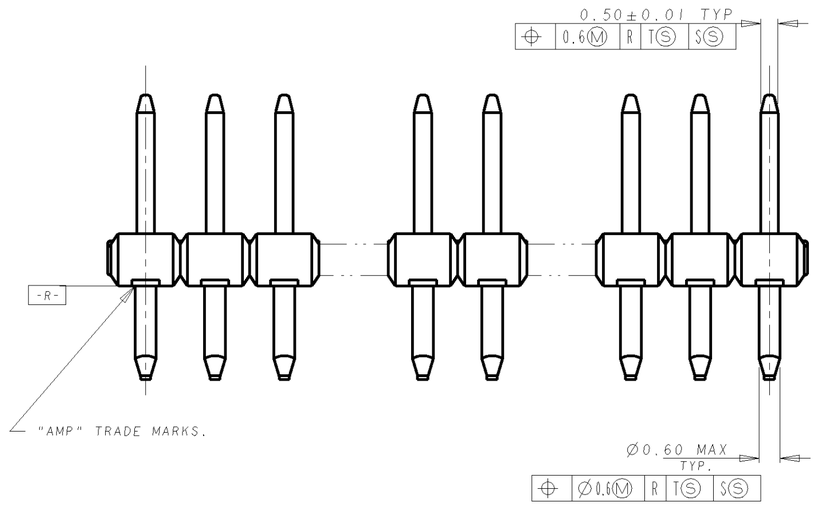

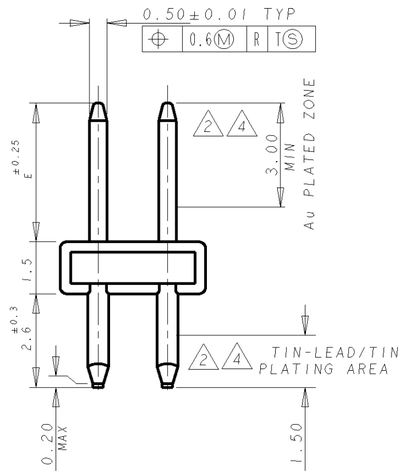

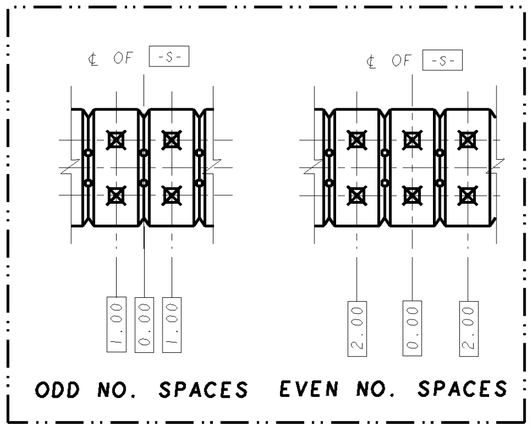

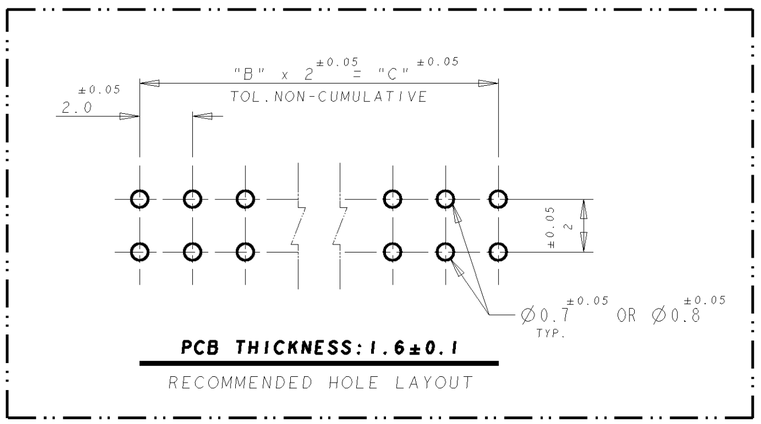

	NIL	4.00	0.0002	4	2	6	6	5-	-8
	17	4.00	0.00076	24	12	26	26	5-	-7
	9, 10	5.00	0.00076	24	12	26	26	5-	-6
	1, 14		0.00076	14	7	16	16	5-	-5
	1, 12		0.00076	10	5	12	12	5-	-4
	NIL		0.00076	—	—	2	2	5-	-3
	25		0.00076	48	24	50	50	5-	-2
	25		0.0002	48	24	50	50	5-	-1
				48	24	50	50	4-	-8
				46	23	48	48	4-	-7
				44	22	46	46	4-	-6
				42	21	44	44	4-	-5
			0.00076	34	17	36	36	4-	-1
				48	24	50	50	3-	-9
				42	21	44	44	3-	-6
				38	19	40	40	3-	-4
			0.0002	34	17	36	36	3-	-2
				28	14	30	30	2-	-9
				22	11	24	24	2-	-6
				20	10	22	22	2-	-5
				18	9	20	20	2-	-4
				16	8	18	18	2-	-3
				14	7	16	16	2-	-2
				12	6	14	14	2-	-1
				10	5	12	12	2-	-0
				8	4	10	10	1-	-9
				6	3	8	8	1-	-8
				4	2	6	6	1-	-7
			0.00076	2	1	4	4	1-	-6
				30	15	32	32	1-	-5
				28	14	30	30	1-	-4
				26	13	28	28	1-	-3
				22	11	24	24	1-	-1
				20	10	22	22	1-	-0
				18	9	20	20		-9
				16	8	18	18		-8
				14	7	16	16		-7
				12	6	14	14		-6
				10	5	12	12		-5
				8	4	10	10		-4
				6	3	8	8		-3
2	NIL	4.00	0.0002	2	1	4	4	5176264-1	
FINISH	PIN OMITTED	"E"	"D"	"C"	"B" SPACES	"A"	POS	P/N	

5176264

DIMENSIONS: mm

TOLERANCES UNLESS OTHERWISE SPECIFIED:
0 PLC ±-
1 PLC ±-
2 PLC ±-
3 PLC ±-
4 PLC ±-
ANGLES ±-
FINISH 2

MATERIAL 1

GENERAL TOLERANCE
0<•≤ 10 : ±0.2
10<•≤ 30 : ±0.25
30<•≤100 : ±0.3
ANGLES : ±3°

DWN WYLEE 07MAR2005
CHK VINCENT TAN
APVD SF LEONG
PRODUCT SPEC -
APPLICATION SPEC -
WEIGHT -

TE Connectivity

NAME AMPMODU 2mm PITCH POST HDR, VERTICAL MOUNT TYPE

SIZE	CAGE CODE	DRAWING NO
A2	00779	C-5176264

CUSTOMER DRAWING

SCALE 8:1 SHEET 1 OF 1 REV P

AMP 1471-9 REV 09MAY94

Pro/ENGINEER DRAWING