Chipsmall Limited consists of a professional team with an average of over 10 year of expertise in the distribution of electronic components. Based in Hongkong, we have already established firm and mutual-benefit business relationships with customers from,Europe,America and south Asia,supplying obsolete and hard-to-find components to meet their specific needs.

With the principle of “Quality Parts,Customers Priority,Honest Operation,and Considerate Service”,our business mainly focus on the distribution of electronic components. Line cards we deal with include Microchip,ALPS,ROHM,Xilinx,Pulse,ON,Everlight and Freescale. Main products comprise IC,Modules,Potentiometer,IC Socket,Relay,Connector.Our parts cover such applications as commercial,industrial, and automotives areas.

We are looking forward to setting up business relationship with you and hope to provide you with the best service and solution. Let us make a better world for our industry!

# Contact us

Tel: +86-755-8981 8866 Fax: +86-755-8427 6832
Email & Skype: info@chipsmall.com Web: www.chipsmall.com
Address: A1208, Overseas Decoration Building, #122 Zhenhua RD., Futian, Shenzhen, China

**Ratings**
Voltage: 300 V
Operating temperature: -20° to 80 °C

**Conductor**
Gauge: 16 AWG, 1.32 mm²
Material: tinned copper strands
Strand size: Ø 0.254 mm
Strand count: 26
Max resistance at 20 °C: 14.6 Ω/km

**Insulator**
Material: PVC
Color: white
Outer diameter: 2.4 ±0.10 mm
Min resistance at 20 °C: 10 MΩ/km

**Shield**
Type: spiral
Material: tinned copper strands
Strand size: Ø 0.12 mm
Strand count: 60 ±2

**Outer jacket**
Material: TPU, 80 °C
Type: extruded, non-integral
Color: white
Diameter: 4.5 ±0.20 mm

**Wire marking**: E339579 AWM STYLE 10846 80°C
300V VW-1 - - - C AWM I/II A 80°C 300V FT1 TENSILITY

**Tests**
Voltage test: 300 V
Spark test: 3.0 kV
Tensile strength: 1.05 kgf/mm²
After aging at 113 ±2 °C for 7 days:
Minimum tensile strength 70 % original
Minimum elongation 65 % original
Heat shock: 121 ±1 °C /1 hour, no observed degradation
Deformation: 121 ±1 °C /1 hour, ≤ 50 %
Cold bend: -10 ±1 °C /1 hour, no observed cracking
Flammability: FT1/ VW-1
Dielectric test: 1500 V ac for 1 minute without breakdown

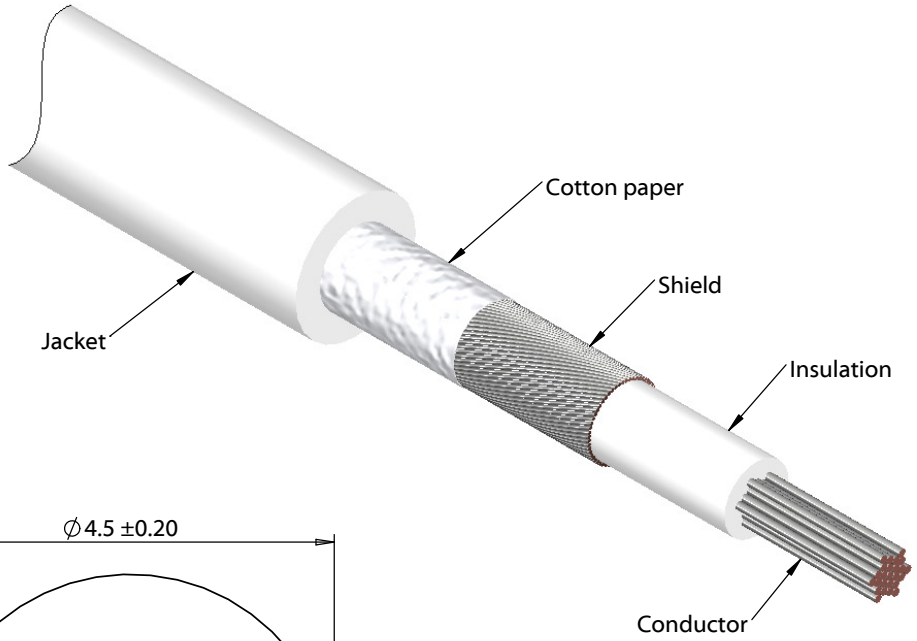


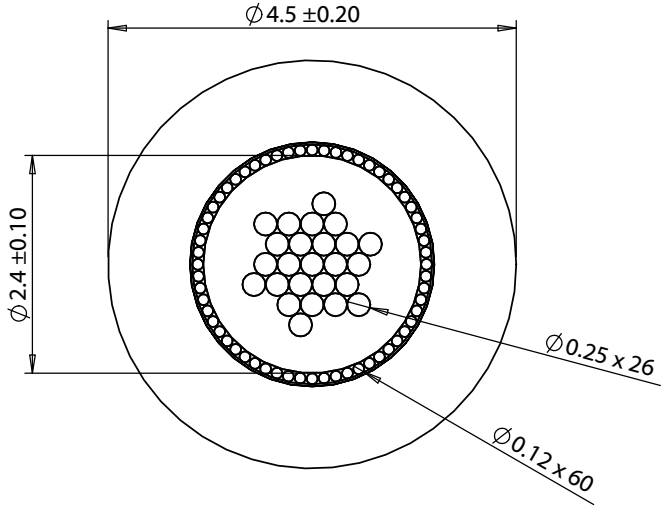


| REVISION | DATE | DESCRIPTION |
|---|---|---|
| A | 9/2/2015 | Initial release |
| A1 | 9/14/2015 | Upgraded fire rating to VW-1/ FT1 |
| A2 | 3/10/2016 | Updated operating temperature range |
| | | |
| | | |

PREPARED: GL 2016.03.11 10:03:07 -08'00'

VERIFIED: PS Digitally signed by PS DN: cn=PS, o, ou, email=QA004@tensility.com, c=US Date: 2016.03.11 11:25:12 -08'00'

DIMENSIONS ARE IN MILLIMETERS

TOLERANCES:
X: ± 0.5 mm
X.X: ± 0.3 mm
X.XX: ± 0.05 mm

NOTES
RoHS and REACH compliant

Function test: no open, no short circuit, no intermittent

Drawing in third angle projected

DESCRIPTION:
Wire, 1C TS, 16 AWG, UL10846, 300V, 80C, 4.5 mm, shielded, VW-1, TPU, white


TENSILITY
20802 Sockeye Place #130
Bend, OR 97701 USA
*tel* 541.323.3228 *fax* 541.323.4202
*800* 877.670.7118 www.tensility.com


SIZE: A
PART NUMBER: 30-00556
SCALE: 12:1
SHEET 1 OF 1

5 4 3 2 1