Chipsmall Limited consists of a professional team with an average of over 10 year of expertise in the distribution of electronic components. Based in Hongkong, we have already established firm and mutual-benefit business relationships with customers from,Europe,America and south Asia,supplying obsolete and hard-to-find components to meet their specific needs.

With the principle of “Quality Parts,Customers Priority,Honest Operation,and Considerate Service”,our business mainly focus on the distribution of electronic components. Line cards we deal with include Microchip,ALPS,ROHM,Xilinx,Pulse,ON,Everlight and Freescale. Main products comprise IC,Modules,Potentiometer,IC Socket,Relay,Connector.Our parts cover such applications as commercial,industrial, and automotives areas.

We are looking forward to setting up business relationship with you and hope to provide you with the best service and solution. Let us make a better world for our industry!

Contact us

Tel: +86-755-8981 8866 Fax: +86-755-8427 6832
Email & Skype: info@chipsmall.com Web: www.chipsmall.com
Address: A1208, Overseas Decoration Building, #122 Zhenhua RD., Futian, Shenzhen, China

DRAWING MADE IN THIRD ANGLE PROJECTION

THIS DRAWING IS UNPUBLISHED. RELEASED FOR PUBLICATION ,19 .

© COPYRIGHT 19 BY AMP INCORPORATED. ALL INTERNATIONAL RIGHTS RESERVED.

LOC	DIST	P	F
G	14		

REVISIONS

ZONE	LTR	DESCRIPTION	DATE	APPD
	F	REVISED & REDRAWN PER 0720-0040-93 REACTIVATE 323106 PER 0720-6018-92	3-26-93	TMB DAP

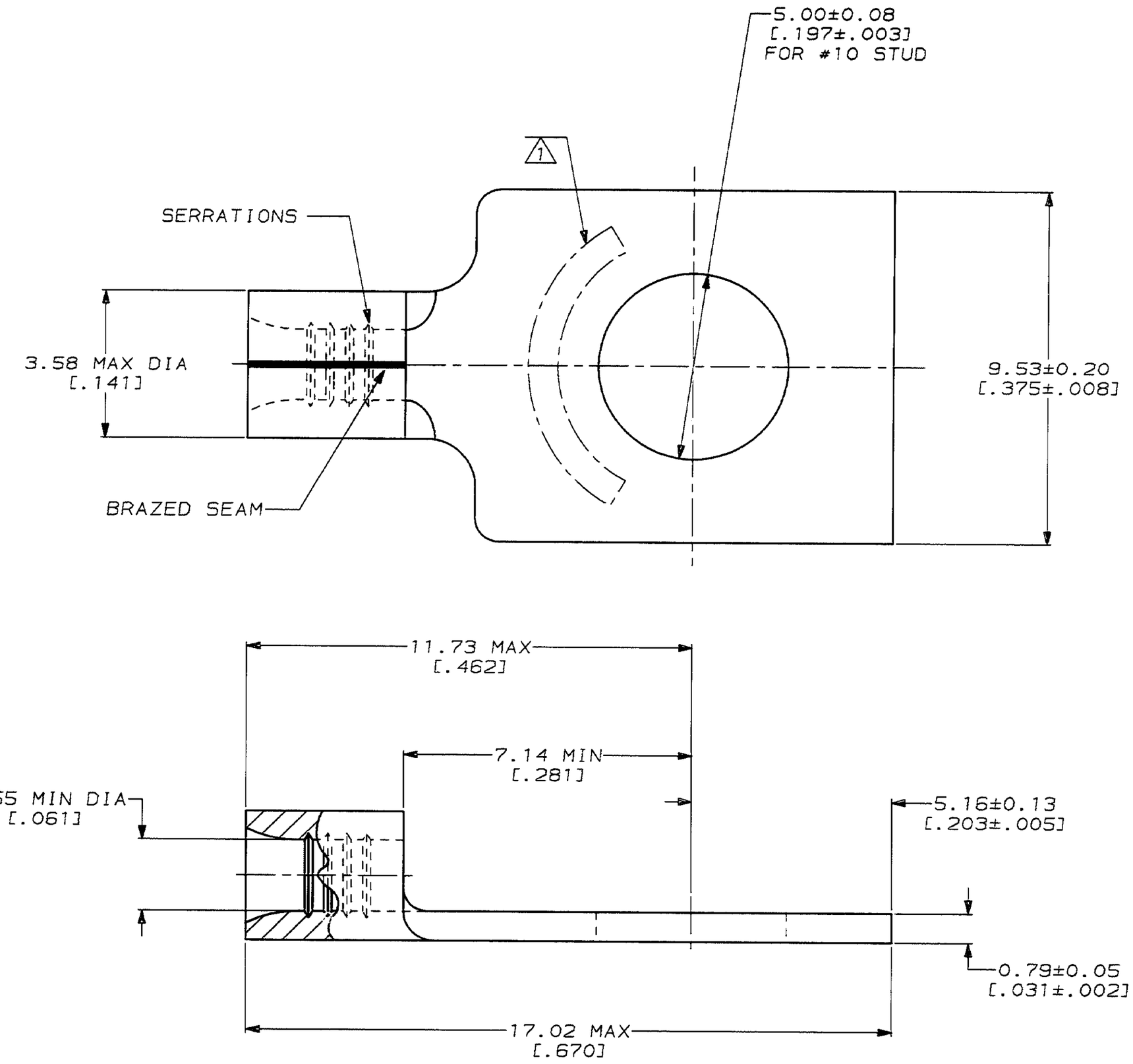

METRIC

DIMENSIONS LISTED IN mm [INCHES]

AMP WIRE RANGE	E13288 Listed
22-16 AWG SOLID OR STRANDED	22-16 AWG SOLID OR STRANDED

LR7189 Certified	MILITARY P/N AND CLASS
22-16 AWG SOLID OR STRANDED	NOT APPLICABLE

1 STAMP AMP 22-18* APPROX AS SHOWN
22-16 TERMINALS ARE STAMPED 22-18 IN ACCORDANCE WITH MILITARY SPECIFICATION MIL-T-7928; COMMERCIAL WIRE RANGE IS 22-16

QUANTITY	PACKAGE TYPE	PART NO
5000	ON TAPE	2-323106-1
----	LOOSE PIECE	323106

AMP INCORPORATED
CUSTOMER SERVICE SYSTEMS

FOR ADDITIONAL PRODUCT INFORMATION OR COPIES OF DRAWINGS AND TECHNICAL DOCUMENTS	PRODUCT INFORMATION CENTER 1-800-522-6752
FOR APPLICATION TOOLING INFORMATION	TOOLING ASSISTANCE CENTER 1-800-722-1111
FOR ORDER ENTRY	1-800-526-5142

MAX RECOMMENDED OPERATING TEMPERATURE: 170°C MAX

VOLTAGE RATING: NOT APPLICABLE

WIRE CROSS SECTIONAL AREA RANGE: 0.26-1.65mm² [509-3,260] CIR MILS SOLID OR STRANDED

THIS DRAWING IS A CONTROLLED DOCUMENT FOR AMP INCORPORATED. IT IS SUBJECT TO CHANGE AND THE CONTROLLING ENGINEERING ORGANIZATION SHOULD BE CONTACTED FOR THE LATEST REVISION.

DO NOT SCALE PRINT. UNLESS SPECIFIED
~~DIMENSIONS IN mm [INCHES]~~
TOLERANCES ON :
2 PLC DEC ± -
3 PLC DEC ± -
ANGLES ± -

MATERIAL: COPPER PER ASTM B-152 ANNEALED

FINISH: TIN PLATE 0.00254[.000100] MIN THK PER MIL-T-10727

DR	3-26-93 TA BRINKMAN
CHK	3-26-93 DA PATTERSON
APPD	3-26-93 DE MILLER
APPD	3-26-93 JL MECKLEY
PRODUCT SPEC	-
APPLICATION SPEC	-
WEIGHT	-

AMP Incorporated
Harrisburg, PA 17105-3608

NAME: TERMINAL, RECTANGULAR TONGUE, SOLISTRAND™

SIZE	CAGE CODE	DRAWING NO
C	00779	C-323106

SCALE 10:1 SHEET 1 OF 1

CUSTOMER DRAWING

AMP 1471-6 REV 3-92

12 AUG 1993 14:57:43 AMP26463 <US128A>DEPT1123>DWG1123>U.SOLISTRAND>U.INLINE