Chipsmall Limited consists of a professional team with an average of over 10 year of expertise in the distribution of electronic components. Based in Hongkong, we have already established firm and mutual-benefit business relationships with customers from,Europe,America and south Asia,supplying obsolete and hard-to-find components to meet their specific needs.

With the principle of “Quality Parts,Customers Priority,Honest Operation,and Considerate Service”,our business mainly focus on the distribution of electronic components. Line cards we deal with include Microchip,ALPS,ROHM,Xilinx,Pulse,ON,Everlight and Freescale. Main products comprise IC,Modules,Potentiometer,IC Socket,Relay,Connector.Our parts cover such applications as commercial,industrial, and automotives areas.

We are looking forward to setting up business relationship with you and hope to provide you with the best service and solution. Let us make a better world for our industry!

Contact us

Tel: +86-755-8981 8866 Fax: +86-755-8427 6832
Email & Skype: info@chipsmall.com Web: www.chipsmall.com
Address: A1208, Overseas Decoration Building, #122 Zhenhua RD., Futian, Shenzhen, China

THIS DRAWING IS UNPUBLISHED. RELEASED FOR PUBLICATION -,- .
© COPYRIGHT - By - ALL RIGHTS RESERVED.

LOC	DIST
G	14

REVISIONS

P	LTR	DESCRIPTION	DATE	DWN	APVD
	D2	REVISED PER ECO-11-004917	11MAR11	RK	HMR

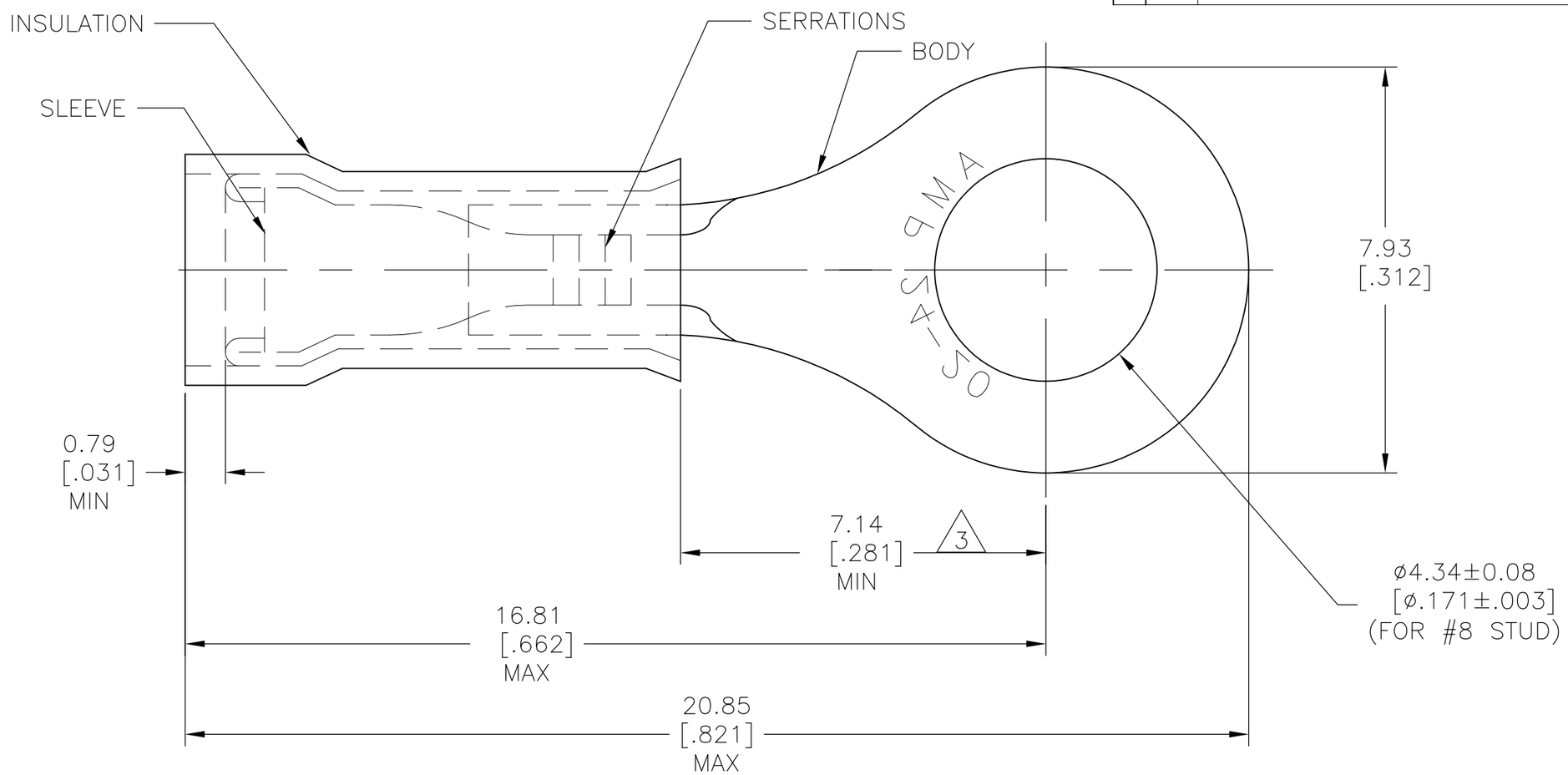

1 FOR 1.02[.040] TO 2.54[.100] WIRE INSULATION DIA

2 TONGUE MATERIAL THK 0.58±0.05[.023±.002]

3 APPLIES FROM EDGE OF METAL BARREL TO CENTERLINE OF STUD HOLE.

QTY	DESCRIPTION	MATERIAL & FINISH	PART NO
1	323989 ON TAPE	BODY&SLEEVE: COPPER ASTM-B152 TIN PL ASTM-B545 INSULATION: NATURAL NYLON ASTM-D4066 TYPE I	1-323989-0
1	WIRE TERMINAL		323989

THIS DRAWING IS A CONTROLLED DOCUMENT.

DIMENSIONS: mm [INCHES]

TOLERANCES UNLESS OTHERWISE SPECIFIED:

0 PLC	± -
1 PLC	± -
2 PLC	± -
3 PLC	± 0.20 [.008]
4 PLC	± -
ANGLES	± 0° 30'

MATERIAL: SEE TABLE

FINISH: SEE TABLE

DWN RAGHAVENDRA 19MAR10
CHK JEFF RUTH 19MAR10
APVD TOM MICHIELUTTI 19MAR10
PRODUCT SPEC —
APPLICATION SPEC —
WEIGHT —

TE Connectivity

NAME: TERMINAL, NYLON - PIDG - RING TONGUE
WIRE SIZE: 24-20

SIZE	CAGE CODE	DRAWING NO	RESTRICTED TO
A3	00779	C-323989	—

CUSTOMER DRAWING

SCALE 10:1 SHEET 1 OF 1 REV D2