Chipsmall Limited consists of a professional team with an average of over 10 year of expertise in the distribution of electronic components. Based in Hongkong, we have already established firm and mutual-benefit business relationships with customers from,Europe,America and south Asia,supplying obsolete and hard-to-find components to meet their specific needs.

With the principle of “Quality Parts,Customers Priority,Honest Operation,and Considerate Service”,our business mainly focus on the distribution of electronic components. Line cards we deal with include Microchip,ALPS,ROHM,Xilinx,Pulse,ON,Everlight and Freescale. Main products comprise IC,Modules,Potentiometer,IC Socket,Relay,Connector.Our parts cover such applications as commercial,industrial, and automotives areas.

We are looking forward to setting up business relationship with you and hope to provide you with the best service and solution. Let us make a better world for our industry!

Contact us

Tel: +86-755-8981 8866 Fax: +86-755-8427 6832
Email & Skype: info@chipsmall.com Web: www.chipsmall.com
Address: A1208, Overseas Decoration Building, #122 Zhenhua RD., Futian, Shenzhen, China

THIS DRAWING IS UNPUBLISHED. RELEASED FOR PUBLICATION -,- .
© COPYRIGHT - BY TYCO ELECTRONICS CORPORATION. ALL RIGHTS RESERVED.

LOC	DIST
G	86

REVISIONS

P	LTR	DESCRIPTION	DATE	DWN	APVD
	U1	REV PER ECR 08-001640	18JAN08	JR	MS

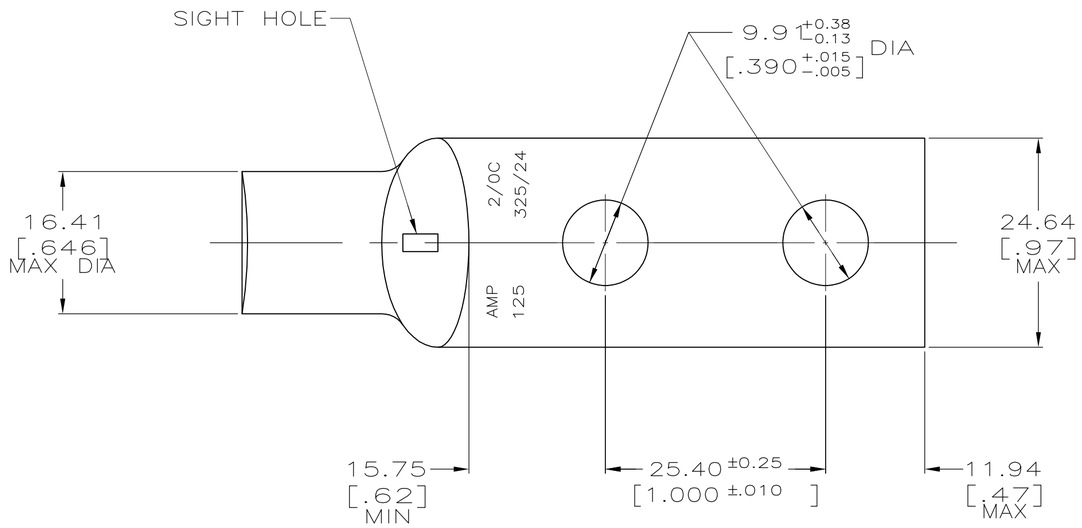

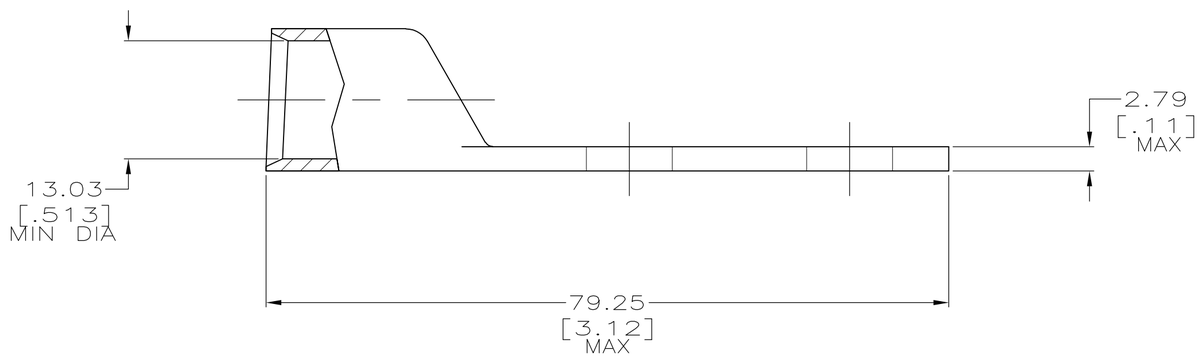

1 CIRCULAR MIL AREA RANGE: 119,500–150,500 CM

2 COPPER PER ASTM B-75, ANNEALED

3 TIN PL 0.00381[.000150] MIN THK PER MIL-T-10727

4 MAX RECOMMENDED OPERATING TEMPERATURE 170°C

326801

PART NO.

THIS DRAWING IS A CONTROLLED DOCUMENT.

DIMENSIONS: MM [INCHES]

TOLERANCES UNLESS OTHERWISE SPECIFIED:
0 PLC ± –
1 PLC ± –
2 PLC ± 0.51[.020]
3 PLC ± –
4 PLC ± –
ANGLES ± –

MATERIAL – 2

FINISH – 3

DWN DK SCHRUM 02/28/90
CHK MS FEHER 18JAN95
APVD TL SHUTTER 18JAN95
PRODUCT SPEC —
APPLICATION SPEC —
WEIGHT .080 LB

Tyco Electronics
Tyco Electronics Corporation
Harrisburg, PA 17105-3608

NAME
TERMINAL, AMPOWER,
WIRE SIZE: 2/0 AWG
–

SIZE	CAGE CODE	DRAWING NO	RESTRICTED TO
A2	00779	C-326801	—

CUSTOMER DRAWING | SCALE 2:1 | SHEET 1 OF 1 | REV U1

326801

AMP 1471-9 REV 31MAR2000