Chipsmall Limited consists of a professional team with an average of over 10 year of expertise in the distribution of electronic components. Based in Hongkong, we have already established firm and mutual-benefit business relationships with customers from,Europe,America and south Asia,supplying obsolete and hard-to-find components to meet their specific needs.

With the principle of “Quality Parts,Customers Priority,Honest Operation,and Considerate Service”,our business mainly focus on the distribution of electronic components. Line cards we deal with include Microchip,ALPS,ROHM,Xilinx,Pulse,ON,Everlight and Freescale. Main products comprise IC,Modules,Potentiometer,IC Socket,Relay,Connector.Our parts cover such applications as commercial,industrial, and automotives areas.

We are looking forward to setting up business relationship with you and hope to provide you with the best service and solution. Let us make a better world for our industry!

Contact us

Tel: +86-755-8981 8866 Fax: +86-755-8427 6832
Email & Skype: info@chipsmall.com Web: www.chipsmall.com
Address: A1208, Overseas Decoration Building, #122 Zhenhua RD., Futian, Shenzhen, China

THIS DRAWING IS UNPUBLISHED. RELEASED FOR PUBLICATION -,- .
© COPYRIGHT - BY TYCO ELECTRONICS CORPORATION. ALL INTERNATIONAL RIGHTS RESERVED.

LOC	DIST
G	14

REVISIONS

P	LTR	DESCRIPTION	DATE	DWN	APVD
	K2	REVISED PER ECR-09-026553	04DEC09	JR	TM

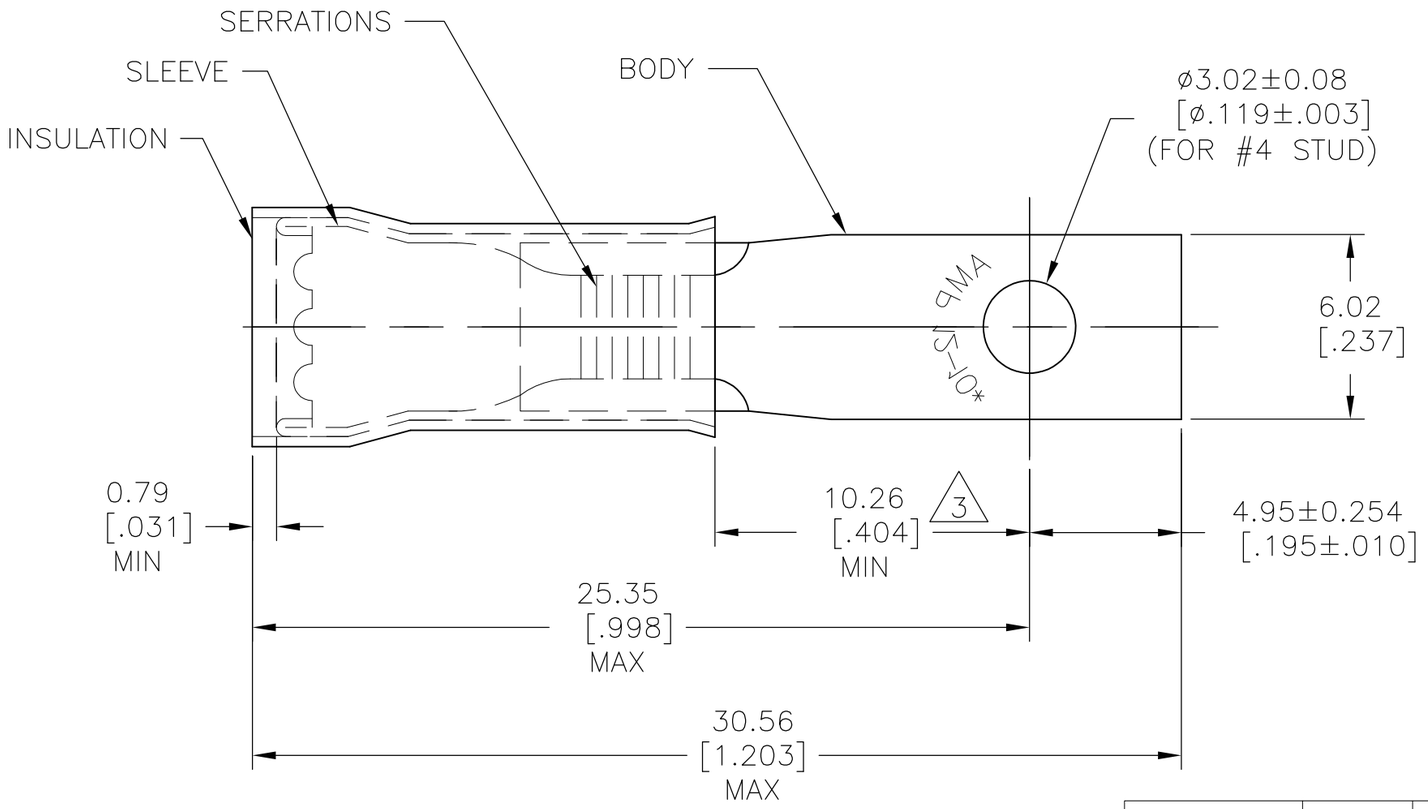

1 TONGUE MATERIAL THK: 1.02±0.05[.040±.002]

2 FOR 3.81[.150] TO 5.84[.230] WIRE INSULATION DIA

3 APPLIES FROM THE METAL EDGE OF THE BARREL TO THE CENTER OF THE STUD

4 MEETS MS17143-18, CLASS 1 & 2

	QTY	DESCRIPTION	MATERIAL & FINISH	PART NO
OBSOLETE	1	~~2-327966-1~~ ON TAPE	BODY & SLEEVE: COPPER (ASTM-B152) TIN PL (ASTM-B545) INSULATION: NYLON (ASTM-D4066) TYPE 1, COLOR: YELLOW	~~2-327966-3~~
OBSOLETE	1	WIRE TERMINAL		~~2-327966-1~~
OBSOLETE	1	~~327966 ON TAPE~~	BODY: COPPER (ASTM-B152) TIN PL (ASTM-B545) SLEEVE: COPPER (ASTM-B152) INSULATION: NYLON COLOR: YELLOW	~~2-327966-2~~
	1	WIRE TERMINAL		4 327966

THIS DRAWING IS A CONTROLLED DOCUMENT.

DIMENSIONS: mm [INCHES]

TOLERANCES UNLESS OTHERWISE SPECIFIED:
0 PLC ± -
1 PLC ± -
2 PLC ± -
3 PLC ± 0.20 [.008]
4 PLC ± -
ANGLES ± 5°

MATERIAL: SEE TABLE

FINISH: SEE TABLE

DWN RAGHAVENDRA 02SEP09
CHK JEFF RUTH 02SEP09
APVD TOM MICHIELUTTI 02SEP09
PRODUCT SPEC —
APPLICATION SPEC —
WEIGHT —

Tyco Electronics
Tyco Electronics Corporation
Harrisburg, PA 17105-3608

NAME
TERMINAL
PIDG - RECTANGULAR TONGUE
WIRE SIZE: 12-10

SIZE	CAGE CODE	DRAWING NO	RESTRICTED TO
A3	00779	C-327966	—

CUSTOMER DRAWING

SCALE 5:1 SHEET 1 OF 1 REV K2