Chipsmall Limited consists of a professional team with an average of over 10 year of expertise in the distribution of electronic components. Based in Hongkong, we have already established firm and mutual-benefit business relationships with customers from,Europe,America and south Asia,supplying obsolete and hard-to-find components to meet their specific needs.

With the principle of “Quality Parts,Customers Priority,Honest Operation,and Considerate Service”,our business mainly focus on the distribution of electronic components. Line cards we deal with include Microchip,ALPS,ROHM,Xilinx,Pulse,ON,Everlight and Freescale. Main products comprise IC,Modules,Potentiometer,IC Socket,Relay,Connector.Our parts cover such applications as commercial,industrial, and automotives areas.

We are looking forward to setting up business relationship with you and hope to provide you with the best service and solution. Let us make a better world for our industry!

Contact us

Tel: +86-755-8981 8866 Fax: +86-755-8427 6832
Email & Skype: info@chipsmall.com Web: www.chipsmall.com
Address: A1208, Overseas Decoration Building, #122 Zhenhua RD., Futian, Shenzhen, China

THIS DRAWING IS UNPUBLISHED. RELEASED FOR PUBLICATION -,- .
© COPYRIGHT – TE Connectivity Ltd. ALL RIGHTS RESERVED.

REVISIONS

P	LTR	DESCRIPTION	DATE	DWN	APVD
	G1	REVISED PER ECR-09-017960	28AUG09	HMR	JR
	G2	REVISED PER ECO-17-007400	01DEC2017	RS	DR

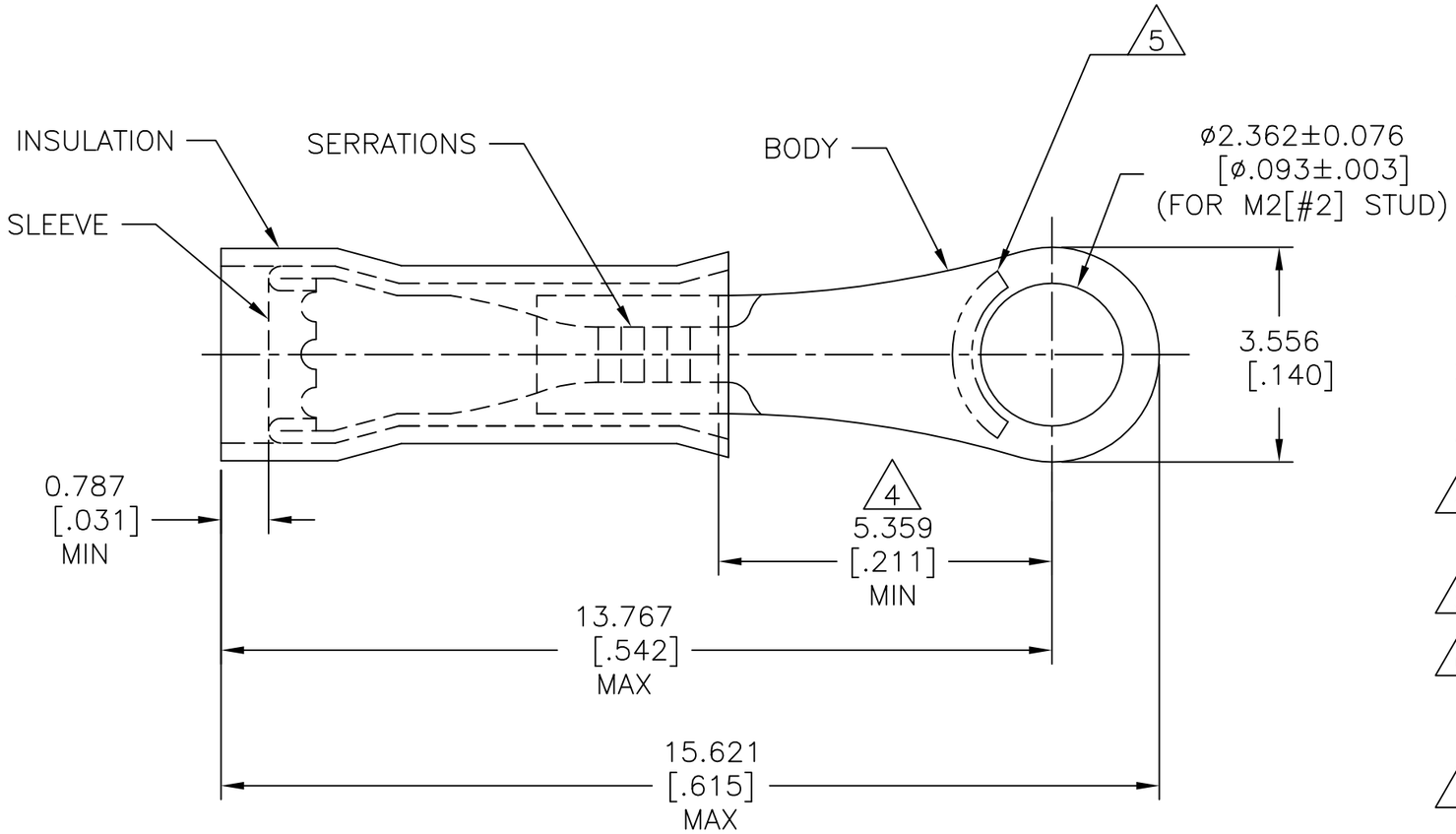

AMP
WIRE RANGE

26–22 AWG
STRANDED

1 FOR ø1.270[ø.050] TO ø2.083[ø.082] WIRE INSULATION.

2 BODY MATERIAL THK = 0.457±0.051[.018±.002]

3 NOTE DELETED.

4 APPLIES FROM THE METAL EDGE OF THE BARREL TO THE CENTER OF THE STUD.

5 STAMP AMP APPROX AS SHOWN.

6 MATERIAL:
BODY & SLEEVE: COPPER (ASTM–B152)
INSULATION: NYLON (ASTM–D4066) TYPE 1.

7 FINISH:
BODY & SLEEVE: TIN PLATED (ASTM–B545)
INSULATION: COLOR–YELLOW.

QTY	PACKAGE TYPE	PART NO
1000	LOOSE PIECE	329951

AMP INCORPORATED
CUSTOMER SERVICE SYSTEMS

FOR ADDITIONAL PRODUCT INFORMATION OR COPIES OF DRAWINGS AND TECHNICAL DOCUMENTS	PRODUCT INFORMATION CENTER 1–800–522–6752	MAX RECOMMENDED OPERATING TEMPERATURE: 105°C[221°F] MAX
FOR APPLICATION TOOLING INFORMATION	TOOLING ASSISTANCE CENTER 1–800–722–1111	VOLTAGE RATING: 300 V MAX
FOR ORDER ENTRY	1–800–526–5142	WIRE CROSS SECTIONAL AREA RANGE, 0.10–0.41mm²[202–810] STRANDED

THIS DRAWING IS A CONTROLLED DOCUMENT.

DIMENSIONS: mm [INCHES]

TOLERANCES UNLESS OTHERWISE SPECIFIED:
0 PLC ± –
1 PLC ± –
2 PLC ± –
3 PLC ± 0.127[.005]
4 PLC ± –
ANGLES ± 0° 30'

MATERIAL 6

FINISH 7

DWN RAGHAVENDRA	28AUG09	
CHK JEFF RUTH	28AUG09	
APVD TOM MICHIELUTTI	28AUG09	
PRODUCT SPEC —		
APPLICATION SPEC 114–2157		
WEIGHT —		

TE Connectivity

NAME
WIRE TERMINAL
PIDG – RING TONGUE
WIRE SIZE: 26–22 AWG

SIZE	CAGE CODE	DRAWING NO	RESTRICTED TO
A3	00779	C–329951	—

CUSTOMER DRAWING | SCALE 10:1 | SHEET 1 OF 1 | REV G2

1470–19 (1/15)