Chipsmall Limited consists of a professional team with an average of over 10 year of expertise in the distribution of electronic components. Based in Hongkong, we have already established firm and mutual-benefit business relationships with customers from,Europe,America and south Asia,supplying obsolete and hard-to-find components to meet their specific needs.

With the principle of “Quality Parts,Customers Priority,Honest Operation,and Considerate Service”,our business mainly focus on the distribution of electronic components. Line cards we deal with include Microchip,ALPS,ROHM,Xilinx,Pulse,ON,Everlight and Freescale. Main products comprise IC,Modules,Potentiometer,IC Socket,Relay,Connector.Our parts cover such applications as commercial,industrial, and automotives areas.

We are looking forward to setting up business relationship with you and hope to provide you with the best service and solution. Let us make a better world for our industry!

Contact us

Tel: +86-755-8981 8866 Fax: +86-755-8427 6832
Email & Skype: info@chipsmall.com Web: www.chipsmall.com
Address: A1208, Overseas Decoration Building, #122 Zhenhua RD., Futian, Shenzhen, China

THIS DRAWING IS UNPUBLISHED. RELEASED FOR PUBLICATION -,- .
© COPYRIGHT - BY TYCO ELECTRONICS CORPORATION. ALL INTERNATIONAL RIGHTS RESERVED.

LOC	DIST
G	14

REVISIONS

P	LTR	DESCRIPTION	DATE	DWN	APVD
	F1	REV PER ECR 09-023200	27OCT09	JR	TM

1 WIRE INSULATION DIA = 2.67 [.105] - 3.81 [.150]

2 TONGUE MATERIAL THK = 0.79±0.05 [.031±.002]

3 0.00254 [.000100] MIN THK. TIN PLATE ASTM-B545

4 MATERIAL:
INSULATION: NYLON - BLUE
BODY & SLEEVE: COPPER (ASTM-B152)

5 APPLIES FROM EDGE OF METAL BARREL TO THE CENTERLINE OF THE STUD.

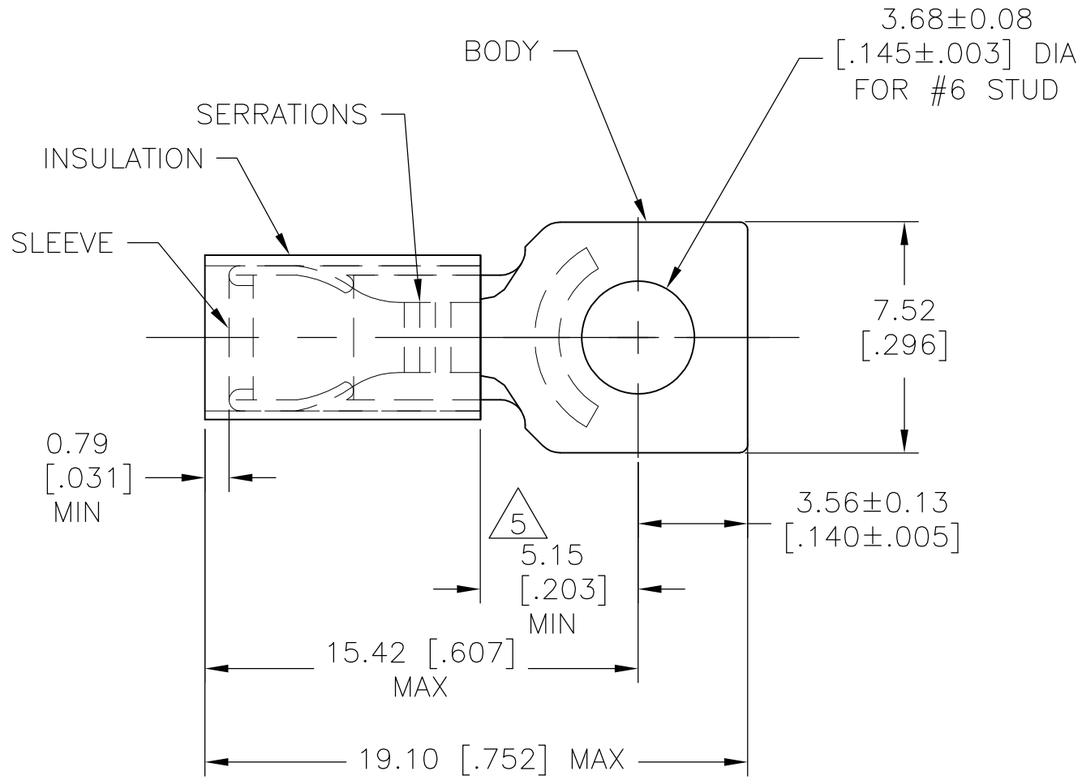

OBSOLETE	~~5000~~	~~ON TAPE, REEL~~	~~2-33168-1~~
	-	LOOSE PIECE	33168
	QTY	DESCRIPTION	PART NO

CUSTOMER SERVICE SYSTEMS

FOR ADDITIONAL PRODUCT INFORMATION OR COPIES OF DRAWINGS AND TECHNICAL DOCUMENTS	PRODUCT INFORMATION CENTER 1-800-522-6752
FOR APPLICATION TOOLING INFORMATION	TOOLING ASSISTANCE CENTER 1-800-722-1111
FOR ORDER ENTRY	1-800-526-5142

THIS DRAWING IS A CONTROLLED DOCUMENT FOR AMP INCORPORATED. IT IS SUBJECT TO CHANGE AND THE CONTROLLING ENGINEERING ORGANIZATION SHOULD BE CONTACTED FOR THE LATEST REVISION.

MAX RECOMMENDED OPERATING TEMPERATURE: 105°C [221° F]

VOLTAGE RATING: 300V MAX

CIRCULAR MIL AREA: 1.04-2.62mm² [2,050-5,180] SOLID OR STRANDED

THIS DRAWING IS A CONTROLLED DOCUMENT.

DIMENSIONS: mm [INCHES]

TOLERANCES UNLESS OTHERWISE SPECIFIED:

0 PLC	± -
1 PLC	± -
2 PLC	± -
3 PLC	± 0.20[.008]
4 PLC	± -
ANGLES	± 0° 30'

MATERIAL 4

FINISH BODY 3

DWN	jr ruth	13JUL09
CHK	TOM MICHIELUTTI	13JUL09
APVD	TOM MICHIELUTTI	13JUL09
PRODUCT SPEC	—	
APPLICATION SPEC	—	
WEIGHT	—	

Tyco Electronics

Tyco Electronics Corporation
Harrisburg, PA 17105-3608

NAME
TERMINAL
PIDG, RECTANGULAR
WIRE SIZE: 16-14

SIZE	CAGE CODE	DRAWING NO	RESTRICTED TO
A3	00779	C-33168	—

CUSTOMER DRAWING | SCALE 5:1 | SHEET 1 OF 1 | REV F1

1470-19 (1/08)