Chipsmall Limited consists of a professional team with an average of over 10 year of expertise in the distribution of electronic components. Based in Hongkong, we have already established firm and mutual-benefit business relationships with customers from,Europe,America and south Asia,supplying obsolete and hard-to-find components to meet their specific needs.

With the principle of “Quality Parts,Customers Priority,Honest Operation,and Considerate Service”,our business mainly focus on the distribution of electronic components. Line cards we deal with include Microchip,ALPS,ROHM,Xilinx,Pulse,ON,Everlight and Freescale. Main products comprise IC,Modules,Potentiometer,IC Socket,Relay,Connector.Our parts cover such applications as commercial,industrial, and automotives areas.

We are looking forward to setting up business relationship with you and hope to provide you with the best service and solution. Let us make a better world for our industry!

Contact us

Tel: +86-755-8981 8866 Fax: +86-755-8427 6832
Email & Skype: info@chipsmall.com Web: www.chipsmall.com
Address: A1208, Overseas Decoration Building, #122 Zhenhua RD., Futian, Shenzhen, China

REFERENCE STANDARD IEC60169-11

I.ELECTRIC PERFORMANCE:

IMPEDANCE(Ω)	: 50
FREQUENCY RANGE	: 0-3 GHz
VSWR	: ≤1.15
PIM(dBc)	: ≤-160 (2X43dBm)
INSERT LOSS (dB)	: ≤ 0.05
INSULATION RESISTANCE (MΩ)	: >5000
WORK VOLTAGE (V)	: 1500
CONDUCTOR RESISTANCE (mΩ)	: OUTER CONDUCTOR<0.5 INNER CONDUCTOR<1

II.MECHANICAL PERFORMANCE:

RETENTION	: >4 N
MATING CYCLES	: 500
TENSILE FORCE (CABLE CONNECTOR)	: 150N
TORSION (CABLE CONNECTOR)	: 0.3N.m

III.MATERIAL AND PLATING:

INNER CONDUCTOR	: SPRING COPPER, PLATING, Ag5μm
OUTER CONDUCTOR	: BRASS, PLATING, COPPER-TIN-ZINC2μm
INSULATOR	: PTFE

IV.ENVIRONMENT:

TEMP.RANGE	: -40°C TO +85°C
WEATHER STANDARD	: IEC 60068 40/085/21
THERMAL SHOCK	: US MIL-STD 202,Meth.107,Cond.B
VIBRATION	: US MIL-STD 202,Meth.204,Cond.B
SHOCK	: US MIL-STD 202,Meth.213,Cond.I
WATER PROOFING STANDARD	: IP 67

V. USE ASSEMBLY INSTRUCTION: 349-50879

VI.ROHS COMPLIANT

332100	REVISIONS				
DRAWING NO.	REV	DESCRIPTION	DATE	ECO	APPR
THIRD ANGLE PROJ.	A	RELEASE TO MFG.	13-Aug-13	--	CL
	B	INSULATOR AND CONTACT SUB ASSEMBLY ASHOWN AS SEPARATE VIEW	24-Apr-14	2725	RAK/BG

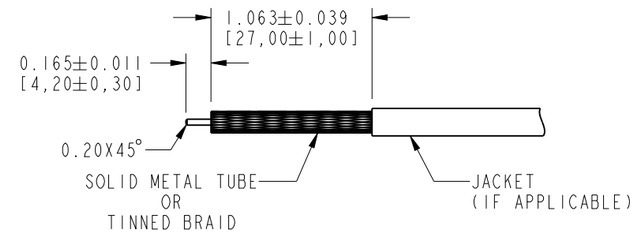

RECOMMENDED CABLE STRIPPING DIMENSIONS

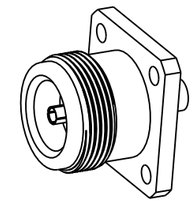

SCALE 1.000

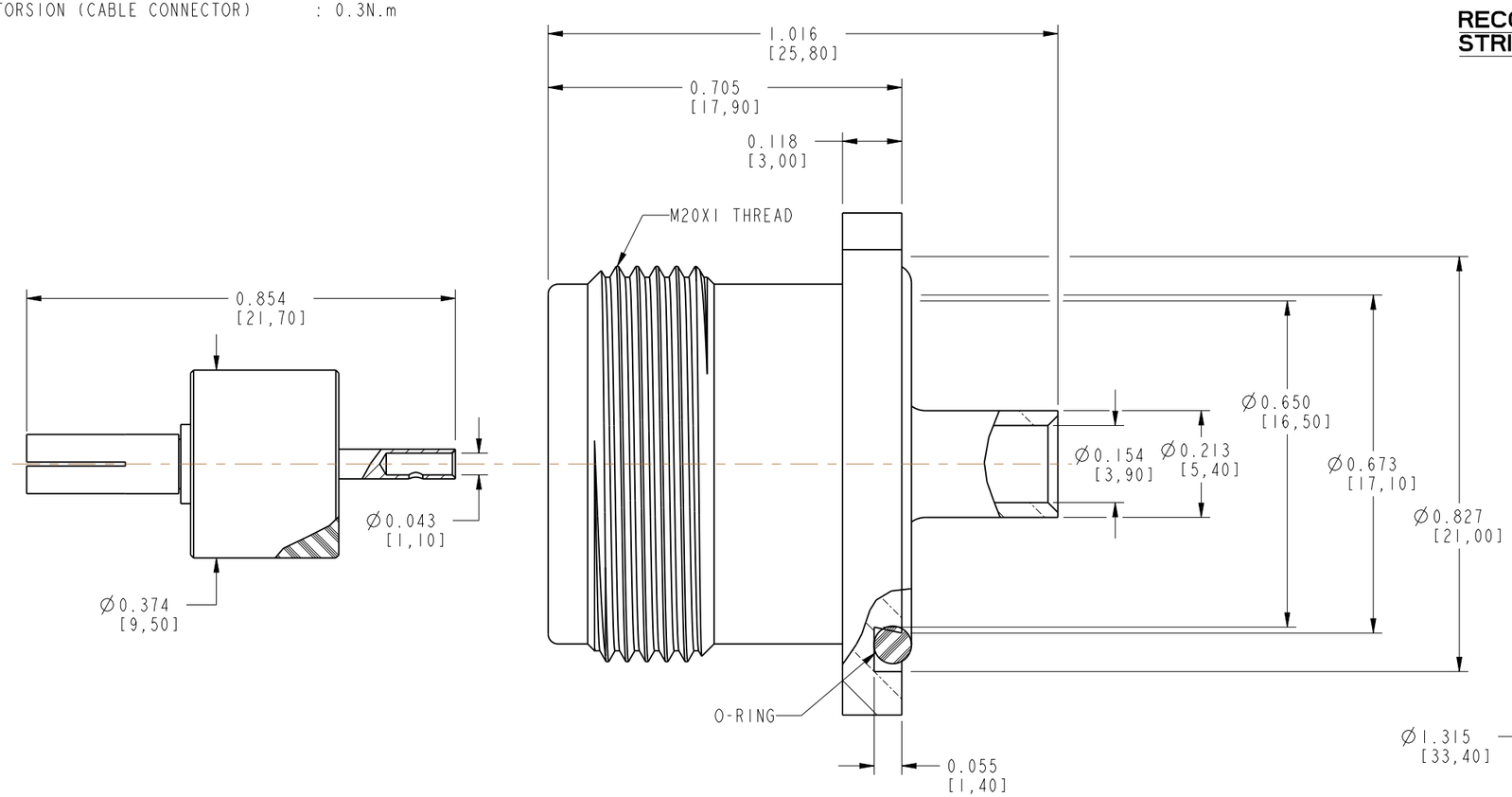

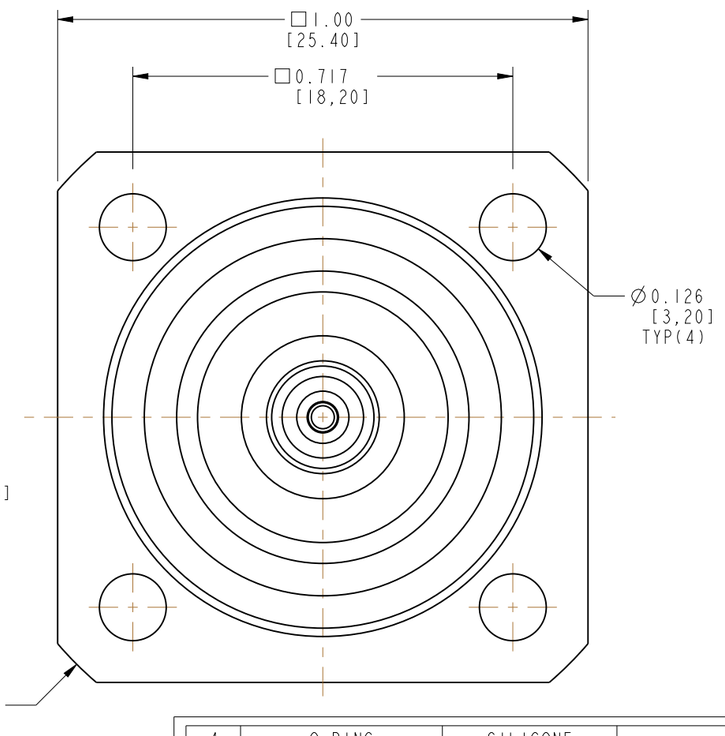

S.NO	DESCRIPTION	MATERIAL	FINISH	QTY
4	O-RING	SILICONE		1
3	INSULATOR	PTFE	NATURAL	1
2	INNER CONDUCTOR	SPRING COPPER	SILVER	1
1	OUTER CONDUCTOR	BRASS	WHITE BRONZE	1

CUSTOMER OUTLINE DRAWING

ALL OTHER SHEETS ARE FOR INTERNAL USE ONLY

UNLESS OTHERWISE SPECIFIED, DIMENSIONS ARE IN INCHES AND TOLERANCES ARE:
2 PLACE DECIMAL ±.015 (0,381 mm) — 3 PLACE DECIMAL ±.005 (0,127 mm) — ANGLES ± 1°

NOTICE - These drawings, specifications, or other data (1) are, and remain the property of Amphenol Corp. (2) must be returned upon request; and (3) are confidential and not to be disclosed to any person other than those to whom they are given by Amphenol Corp. The furnishing of these drawings, specifications, or other data by Amphenol Corp., or to any other person to anyone for any purpose is not to be regarded by implication or otherwise in any manner licensing, granting rights or permitting such holder or any other person to manufacture, use or sell any product, process or design, patented or otherwise, that may in any way be related to or disclosed by said drawings, specifications, or other data.

MATERIAL: SEE NOTES

REFERENCE

DRAWN: CLEMENT	DATE: 13-Aug-13	TITLE: 4.1/9.5 4-HOLE FLANGE SOLDER JACK FOR RG 402 CABLE
ENGINEER: CLEMENT	DATE: 13-Aug-13	
APPROVED: B.C. GLEISSNER	DATE: 13-Aug-13	
CAD FILE		

Amphenol Connex

SCALE: 3.5:1 — SHEET 1 OF 1

DWG SIZE	DRAWING NO.	REV
B	332100	B