Chipsmall Limited consists of a professional team with an average of over 10 year of expertise in the distribution of electronic components. Based in Hongkong, we have already established firm and mutual-benefit business relationships with customers from,Europe,America and south Asia,supplying obsolete and hard-to-find components to meet their specific needs.

With the principle of “Quality Parts,Customers Priority,Honest Operation,and Considerate Service”,our business mainly focus on the distribution of electronic components. Line cards we deal with include Microchip,ALPS,ROHM,Xilinx,Pulse,ON,Everlight and Freescale. Main products comprise IC,Modules,Potentiometer,IC Socket,Relay,Connector.Our parts cover such applications as commercial,industrial, and automotives areas.

We are looking forward to setting up business relationship with you and hope to provide you with the best service and solution. Let us make a better world for our industry!

Contact us

Tel: +86-755-8981 8866 Fax: +86-755-8427 6832
Email & Skype: info@chipsmall.com Web: www.chipsmall.com
Address: A1208, Overseas Decoration Building, #122 Zhenhua RD., Futian, Shenzhen, China

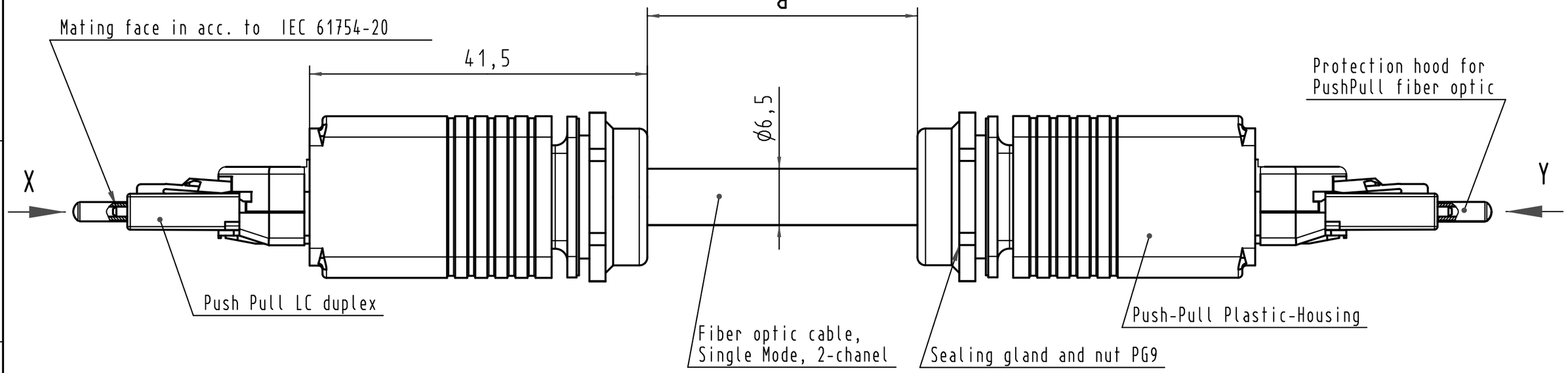

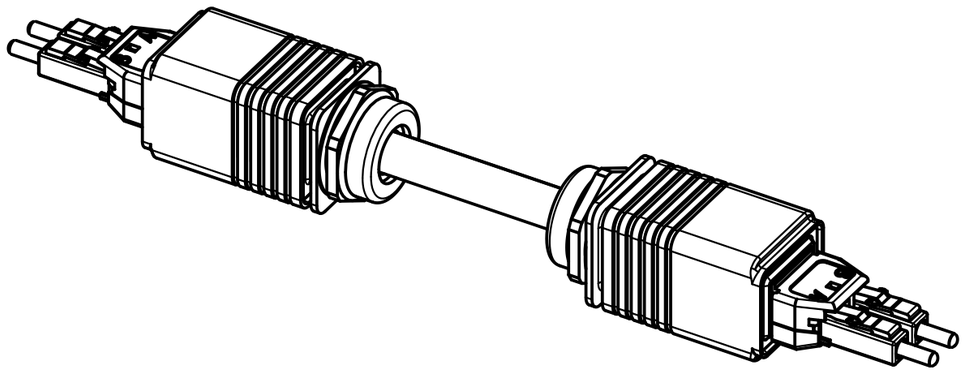

X
(without protection hood)

Loading-Plan

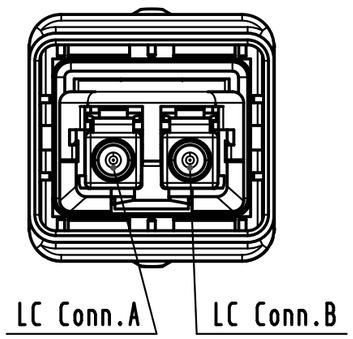

A —— blue —— B
B —— orange —— A

Y
(without protection hood)

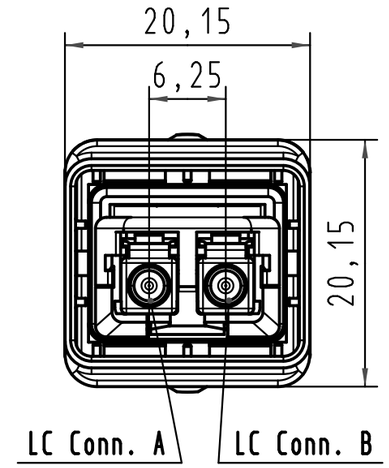

-Protection level: IP67/65
-Temperature range: -40°C ...+70°C

Cont No.	Type of cable	Part-No.	Dim. a
9	High strength fiber optic breakout cable Single Mode	33 58 211 300 0002	300 m
8	High strength fiber optic breakout cable Single Mode	33 58 211 100 0002	100 m
7	High strength fiber optic breakout cable Single Mode	33 58 211 060 0002	60 m
6	High strength fiber optic breakout cable Single Mode	33 58 211 050 0002	50 m
5	High strength fiber optic breakout cable Single Mode	33 58 211 040 0002	40 m
4	High strength fiber optic breakout cable Single Mode	33 58 211 020 0002	20 m
3	High strength fiber optic breakout cable Single Mode	33 58 211 010 0002	10 m
2	High strength fiber optic breakout cable Single Mode	33 58 211 005 0002	5 m
1	High strength fiber optic breakout cable Single Mode	33 58 211 001 0002	1 m

All Dimensions in mm
Original Size DIN A 3

Techn. Character.

Nicht tolerierte Maße/ *Free size tolerances*

Mod.	Dat.	Name
DRS506A	21.05.09	MS
EC00166	17.02.09	MR
35590	13.01.09	MR
35014		

	Dat.	Name
Detail.	20.08.08	MR
Insp.	20.08.08	RA
Stand.		

Maßstab/*Scale* 2:1

HARTING Electronics GmbH & Co. KG
D-32339 ESPELKAMP

PushPull fiber optic assembly
2xPushPull LC DUPLEX, plastic
Single Mode

TB 33 58 211 xxx 0002

Sub. Sub

Blatt/ *page*

Alle Rechte vorbehalten/ *All rights reserved*