Chipsmall Limited consists of a professional team with an average of over 10 year of expertise in the distribution of electronic components. Based in Hongkong, we have already established firm and mutual-benefit business relationships with customers from,Europe,America and south Asia,supplying obsolete and hard-to-find components to meet their specific needs.

With the principle of “Quality Parts,Customers Priority,Honest Operation,and Considerate Service”,our business mainly focus on the distribution of electronic components. Line cards we deal with include Microchip,ALPS,ROHM,Xilinx,Pulse,ON,Everlight and Freescale. Main products comprise IC,Modules,Potentiometer,IC Socket,Relay,Connector.Our parts cover such applications as commercial,industrial, and automotives areas.

We are looking forward to setting up business relationship with you and hope to provide you with the best service and solution. Let us make a better world for our industry!

Contact us

Tel: +86-755-8981 8866 Fax: +86-755-8427 6832
Email & Skype: info@chipsmall.com Web: www.chipsmall.com
Address: A1208, Overseas Decoration Building, #122 Zhenhua RD., Futian, Shenzhen, China

used for:

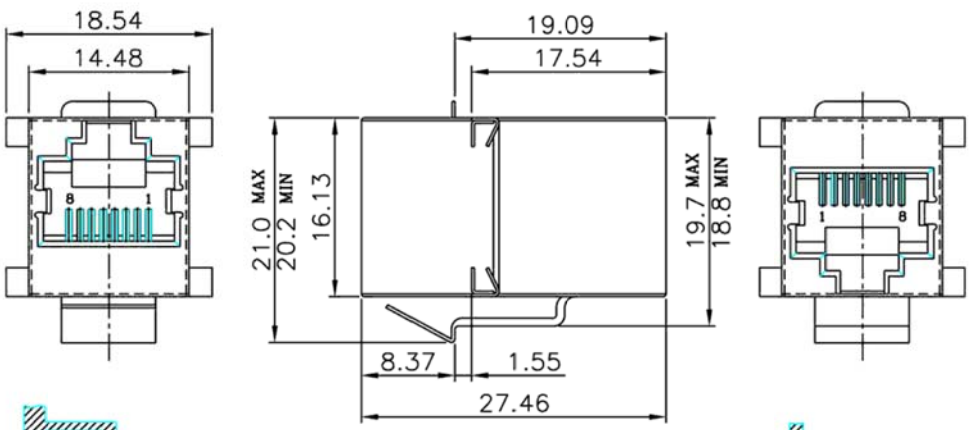

MATERIALS:
SHIELDED: STAINLESS STEEL.
PLASTIC HOUSING: ENGINEERING THERMOPLASTIC
FLAMMBILITY RATING UL 94V-0.
CONTACTS: 0.35MM THICKNESS PHOSPHOR BRONZE
PLATING: GOLD PLATING OVER NICKEL IN CONTACT.

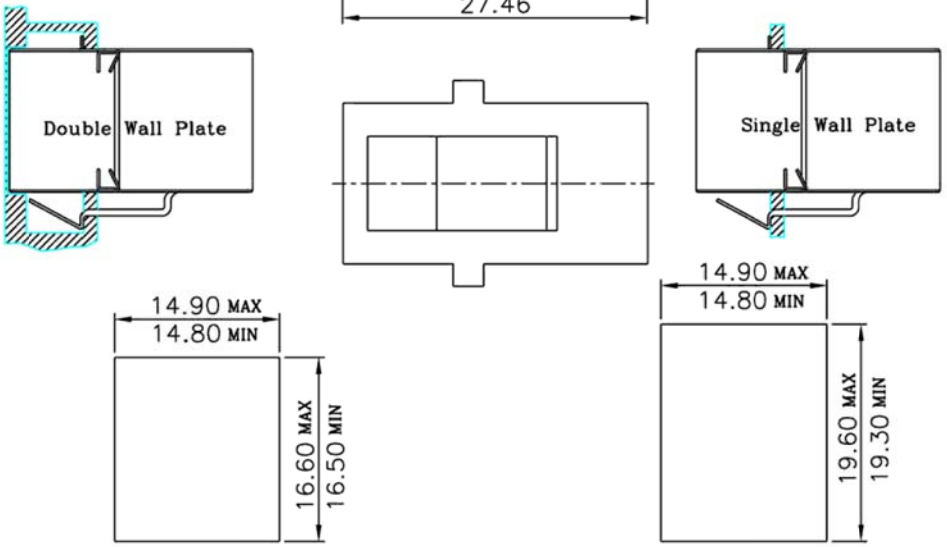

Front Panel Jack Only Clearance
W/O Latch Feature

Single Panel-Latch Clearance
Panel Thickness 0.062 inch

THIS DRAWING MAY NOT BE COPIED OR REPRODUCED IN ANY WAY, AND MAY NOT BE PASSED ON TO A THIRD PARTY WITHOUT WRITTEN PERMISSION. OWNERSHIP AND COPYRIGHT OF CONEC CORPORATION

DO NOT ALTER CAD DRAWING BY HAND

rev.	description	date	name

CONEC CORPORATION
Brampton, Ontario

tolerance
unless otherwise specified
Decimal: .x ±0.3 .xx ±0.3
Angles:
Dim. in mm

	date	name
2005		
draw.	May. 03	Vincent Ke
appd.		
norm		
d-old		

CONEC®

scale:
material:
title: Modular Coupler Jack 8p8c
Shielded
drawing no.: C0505R02A
AutoCAD 2004
DIN A3
sheet 1/1
part no.: 33TS3101S-88N