Chipsmall Limited consists of a professional team with an average of over 10 year of expertise in the distribution of electronic components. Based in Hongkong, we have already established firm and mutual-benefit business relationships with customers from,Europe,America and south Asia,supplying obsolete and hard-to-find components to meet their specific needs.

With the principle of “Quality Parts,Customers Priority,Honest Operation,and Considerate Service”,our business mainly focus on the distribution of electronic components. Line cards we deal with include Microchip,ALPS,ROHM,Xilinx,Pulse,ON,Everlight and Freescale. Main products comprise IC,Modules,Potentiometer,IC Socket,Relay,Connector.Our parts cover such applications as commercial,industrial, and automotives areas.

We are looking forward to setting up business relationship with you and hope to provide you with the best service and solution. Let us make a better world for our industry!

Contact us

Tel: +86-755-8981 8866 Fax: +86-755-8427 6832
Email & Skype: info@chipsmall.com Web: www.chipsmall.com
Address: A1208, Overseas Decoration Building, #122 Zhenhua RD., Futian, Shenzhen, China

THIS DRAWING IS UNPUBLISHED. RELEASED FOR PUBLICATION -,- .
© COPYRIGHT - BY TYCO ELECTRONICS CORPORATION. ALL RIGHTS RESERVED.

LOC	DIST
G	14

REVISIONS

P	LTR	DESCRIPTION	DATE	DWN	APVD
	V1	REV PER ECR 06-001832	22APR06	JR	TM

1. STAMP AMP 12-10*, 6-9 APPROX AS SHOWN
2. WIRE INSULATION DIA: .150-.250
3. TONGUE MATERIAL THK IS 1.02±0.05 [.040±.002]
4. MATERIAL: BODY; COPPER PER ASTM B152
   INSULATION; PVC
   COLOR; YELLOW
5. FINISH: BODY; TIN PL. PER ASTM B545

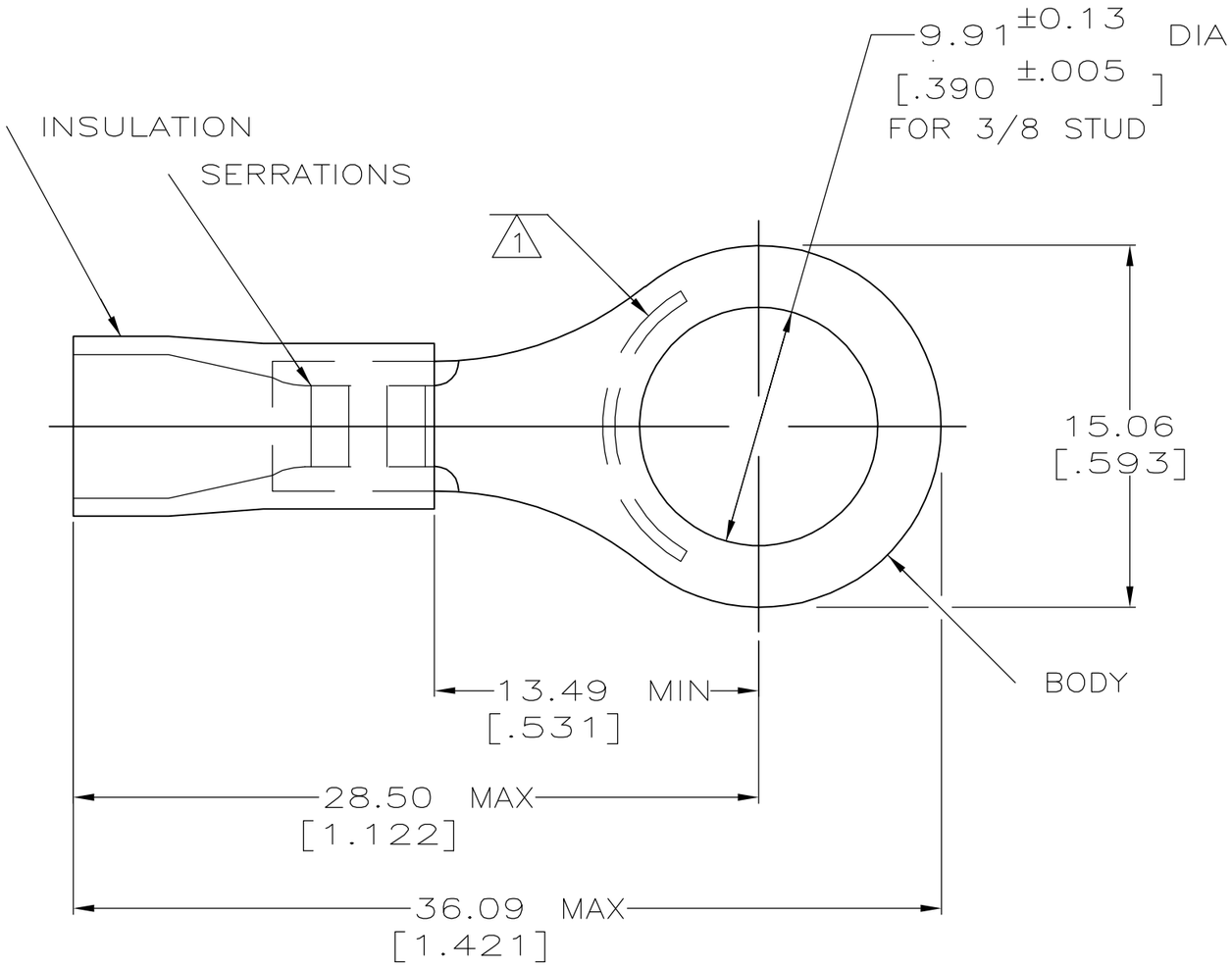

AMP WIRE RANGE	Listed	LR7189 Certified
12-10 AWG SOLID OR STRANDED	12-10 AWG SOLID OR STRANDED	12-10 AWG SOLID OR STRANDED

QTY	PACKAGE TYPE	PART NO
50	LOOSE PC,BOX	8-34173-2
1000	ON TAPE, REEL	2-34173-1
500	LOOSE PIECE	34173

AMP INCORPORATED
CUSTOMER SERVICE SYSTEMS

FOR ADDITIONAL PRODUCT INFORMATION OR COPIES OF DRAWINGS AND TECHNICAL DOCUMENTS	PRODUCT INFORMATION CENTER 1-800-522-6752
FOR APPLICATION TOOLING INFORMATION	TOOLING ASSISTANCE CENTER 1-800-722-1111
FOR ORDER ENTRY	1-800-526-5142

THIS DRAWING IS UNPUBLISHED. THIS DRAWING IS A CONTROLLED DOCUMENT FOR AMP INCORPORATED. IT IS SUBJECT TO CHANGE AND THE CONTROLLING ENGINEERING ORGANIZATION SHOULD BE CONTACTED FOR THE LATEST REVISION.

MAX RECOMMENDED OPERATING TEMPERATURE: 105°C [221°F]

VOLTAGE RATING: N/A

CIRCULAR MIL AREA: 2.62-6.64mm² [5180-13100] SOLID OR STRANDED

THIS DRAWING IS A CONTROLLED DOCUMENT.

DIMENSIONS: mm [INCHES]

TOLERANCES UNLESS OTHERWISE SPECIFIED:

0 PLC	± -
1 PLC	± -
2 PLC	± 0.20[.008]
3 PLC	± -
4 PLC	± -
ANGLES	± -

MATERIAL - 4

FINISH - 5

DWN	DK SCHRUM	08/06/92
CHK	RE HERSEY	11/10/92
APVD	M ELLIS	11/10/92
PRODUCT SPEC	108-1034	
APPLICATION SPEC	NOT AVAILABLE	
WEIGHT	-	

tyco Electronics
Tyco Electronics Corporation
Harrisburg, Pa 17105-3608

NAME: TERMINAL, RING TONGUE, PLASTI-GRIP

-

SIZE	CAGE CODE	DRAWING NO	RESTRICTED TO
A3	00779	C-34173	-

CUSTOMER DRAWING | SCALE 4:1 | SHEET 1 OF 1 | REV V1

AMP 1470-19 REV 31MAR2000