Chipsmall Limited consists of a professional team with an average of over 10 year of expertise in the distribution of electronic components. Based in Hongkong, we have already established firm and mutual-benefit business relationships with customers from,Europe,America and south Asia,supplying obsolete and hard-to-find components to meet their specific needs.

With the principle of “Quality Parts,Customers Priority,Honest Operation,and Considerate Service”,our business mainly focus on the distribution of electronic components. Line cards we deal with include Microchip,ALPS,ROHM,Xilinx,Pulse,ON,Everlight and Freescale. Main products comprise IC,Modules,Potentiometer,IC Socket,Relay,Connector.Our parts cover such applications as commercial,industrial, and automotives areas.

We are looking forward to setting up business relationship with you and hope to provide you with the best service and solution. Let us make a better world for our industry!

Contact us

Tel: +86-755-8981 8866 Fax: +86-755-8427 6832
Email & Skype: info@chipsmall.com Web: www.chipsmall.com
Address: A1208, Overseas Decoration Building, #122 Zhenhua RD., Futian, Shenzhen, China

DO NOT SCALE | DIMENSIONS IN MM.

C.A.D. FILE CODE S. C344078.D

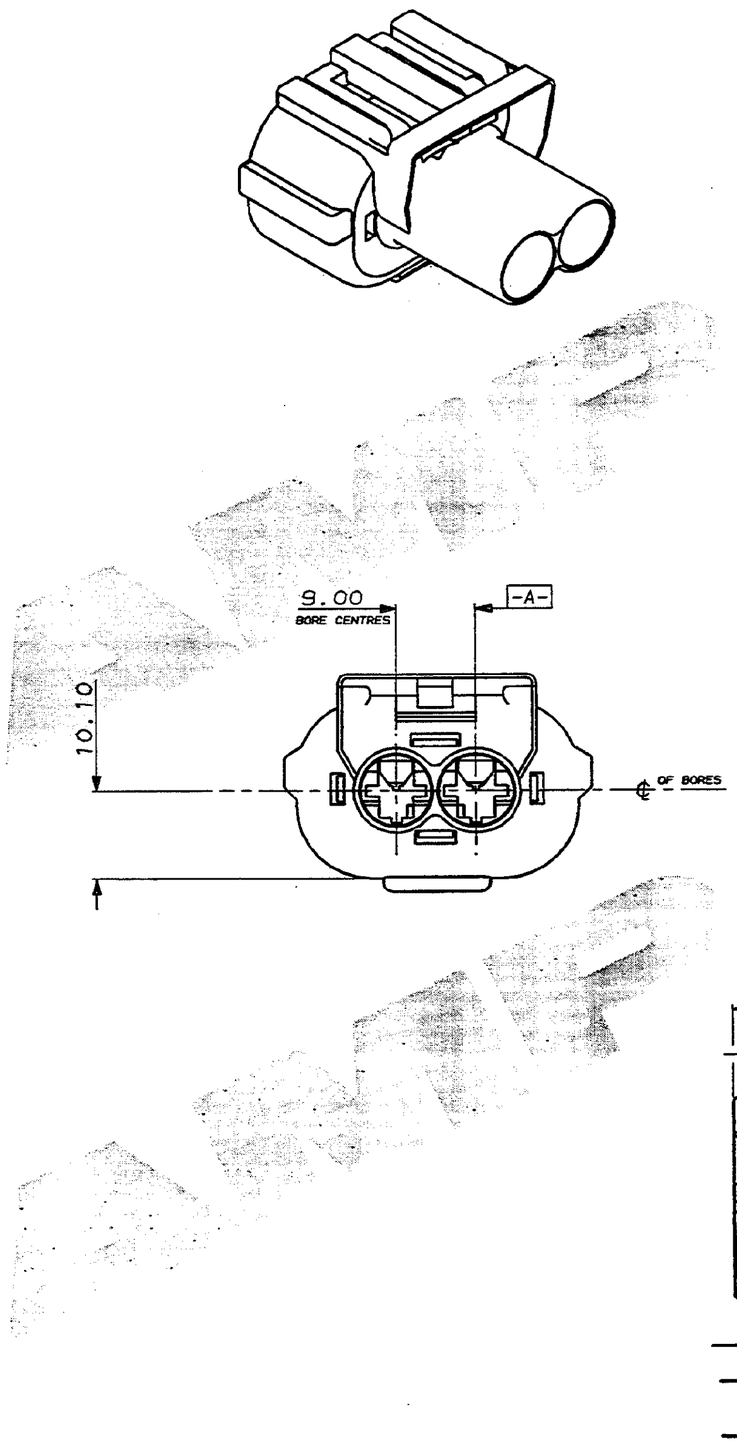

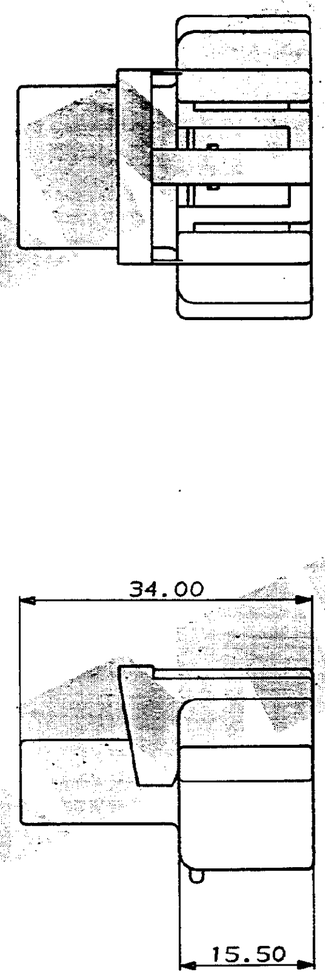

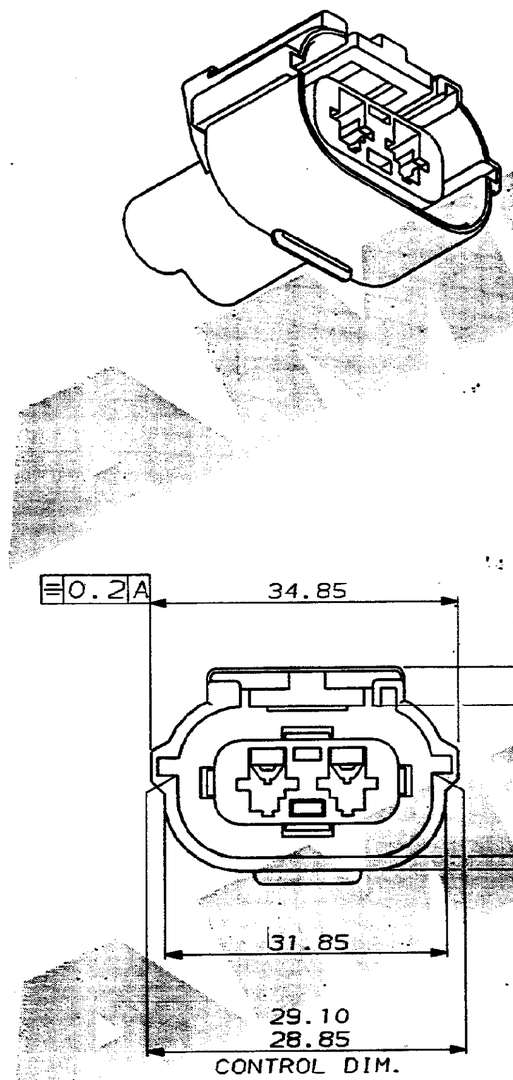

FINISH	MATERIAL	PART NUMBER
WHITE	NYLON 66	344078-4
BLUE	NYLON 66	344078-3
RED	NYLON 66	344078-2
BLACK	NYLON 66	344078-1

CUSTOMER DWG
FOR REFERENCE ONLY

©COPYRIGHT 1987 BY AMP of GREAT BRITAIN LTD. ALL INTERNATIONAL RIGHTS RESERVED. ALL PRODUCTS MAY BE COVERED BY BRITISH AND FOREIGN PATENTS AND/OR PATENTS PENDING.

RELEASED FOR PUBLICATION 22/06/87

REV	APPROVED	ECN	DATE
-	-	-	-
-	-	-	-
D	ADDED -1,-2 & -4	CS874	28.11.91
C	ADDED CORE (PICTORIAL CHANGE ONLY)	CS888	16.1.91
B	UPDATED	CS241	13.4.89
A	UPDATED	CS008	28.7.88
0	REL. FOR PROD.	C0755	22.2.88

TOLERANCES UNLESS OTHERWISE STATED : DEC ± 0.5 ANGLES ± 1°

DR. I.J. 22/06/87
CH. R.J.S.
APP. B.J.

AMP of Great Britain Ltd.
TERMINAL HOUSE STANMORE MIDDX.

NAME 2 WAY RECEPTACLE HSG ECONOSEAL 3 HIGH CURRENT

SCALE	LOC	SIZE	DWG. No.	REV	SHEET
2/1	E	A2	C344078	D	1/1

FORMAT 22/05/88