Chipsmall Limited consists of a professional team with an average of over 10 year of expertise in the distribution of electronic components. Based in Hongkong, we have already established firm and mutual-benefit business relationships with customers from,Europe,America and south Asia,supplying obsolete and hard-to-find components to meet their specific needs.

With the principle of “Quality Parts,Customers Priority,Honest Operation,and Considerate Service”,our business mainly focus on the distribution of electronic components. Line cards we deal with include Microchip,ALPS,ROHM,Xilinx,Pulse,ON,Everlight and Freescale. Main products comprise IC,Modules,Potentiometer,IC Socket,Relay,Connector.Our parts cover such applications as commercial,industrial, and automotives areas.

We are looking forward to setting up business relationship with you and hope to provide you with the best service and solution. Let us make a better world for our industry!

Contact us

Tel: +86-755-8981 8866 Fax: +86-755-8427 6832
Email & Skype: info@chipsmall.com Web: www.chipsmall.com
Address: A1208, Overseas Decoration Building, #122 Zhenhua RD., Futian, Shenzhen, China

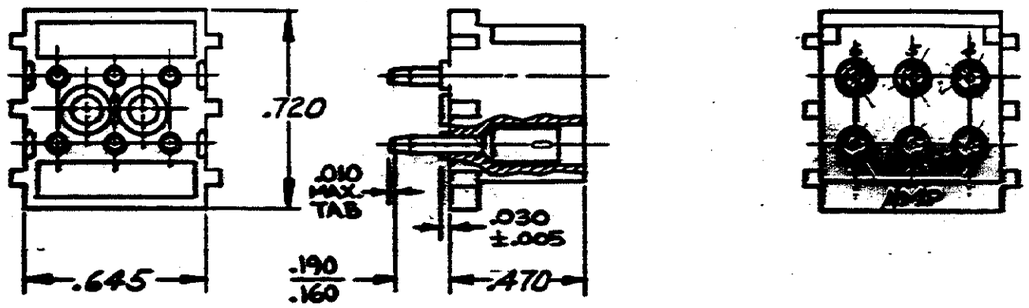

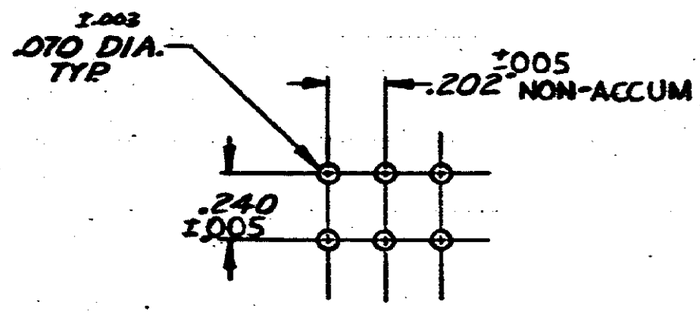

RECOMMENDED LAYOUT FOR .062 THICK P.C. BOARD

1. MATES WITH HOUSING 480276
2. PARTS COMPLY WITH AMP SOLDERABILITY SPEC. #109-11-3
3. OBSOLETE PARTS: OBSOLETE CIS STREAMLINING PER D.RENAUD/D.SINISI

3 OBSOLETE	350641-2	NYLON - NATURAL	PHOS BRZ - GOLD
	350641-1	NYLON - NATURAL	PHOS BRZ - PRE-TIN
	ASSEMBLY NO.	HSG. MATL & COLOR	PIN MATL & FINISH

Unpublished copy not to be reproduced nor published without written permission of AMP Incorporated

LTR	REVISION RECORD	DR	CHK	DATE
G	OBSOLETE 1-1,1-2,2-1,2-2,3-1,3-2,4-1,4-2,5-1,5-2,6-1,6-2,7-1,7-2,8-1,8-2,9-1,9-2	KW	RS	4-21-86
H	RESTORED	BKD	RS	4/15/85
F	REV. PER M-7376	SS	[illegible]	[illegible]
E	REVISED M-3932	MF	D.H.	2-28-77
D	ECN M-3871	PCH	D.H.	9-9-76
C	ECN M-3952	GY	RRF	3/4/76
B	REDRAWN FOR PAD	DR	[illegible]	[illegible]
A	ECN M-3156	[illegible]	[illegible]	[illegible]
—	PER ECN M-2996	HLS	[illegible]	31-1-74
G1	REV PER ECO-09-026346	KK	AEG	NOV09

NUMBER 350641

REQUIRED PER ASSEMBLY

DESCRIPTION

© 1973 AMP INCORPORATED. ALL RIGHTS RESERVED. AMP PRODUCTS COVERED BY PATENTS AND/OR PATENTS PENDING.

CUSTOMER COPY REFERENCE ONLY

DR 9. Eckman 5-31-73

CHK E Chromey 4-5-74

DR E.M. Pottenger 4/5/74

APP E.M. Pottenger 4/5/74

MATERIAL AND FINISH: SEE TABLE

WIRE — RANGE — INSULATION: #

TOLERANCE EXCEPT AS NOTED ±.015 ±1° 0'

SCALE: #

AMP INCORPORATED HARRISBURG, PENNA

CLASS: #

TYPE: #

LOC CM B NO 350641 REV G1

NAME 6 CIRCUIT MATE-N-LOK P.C. BOARD SOCKET HEADER

DIMENSIONS IN INCHES, DO NOT SCALE PRINT.

AMP 1253 REV 11/65