Chipsmall Limited consists of a professional team with an average of over 10 year of expertise in the distribution of electronic components. Based in Hongkong, we have already established firm and mutual-benefit business relationships with customers from,Europe,America and south Asia,supplying obsolete and hard-to-find components to meet their specific needs.

With the principle of “Quality Parts,Customers Priority,Honest Operation,and Considerate Service”,our business mainly focus on the distribution of electronic components. Line cards we deal with include Microchip,ALPS,ROHM,Xilinx,Pulse,ON,Everlight and Freescale. Main products comprise IC,Modules,Potentiometer,IC Socket,Relay,Connector.Our parts cover such applications as commercial,industrial, and automotives areas.

We are looking forward to setting up business relationship with you and hope to provide you with the best service and solution. Let us make a better world for our industry!

Contact us

Tel: +86-755-8981 8866 Fax: +86-755-8427 6832
Email & Skype: info@chipsmall.com Web: www.chipsmall.com
Address: A1208, Overseas Decoration Building, #122 Zhenhua RD., Futian, Shenzhen, China

THIS DRAWING IS UNPUBLISHED. RELEASED FOR PUBLICATION -,- .
© COPYRIGHT - By - ALL RIGHTS RESERVED.

LOC	DIST
CM	00

REVISIONS

P	LTR	DESCRIPTION	DATE	DWN	APVD
	V	REVISED PER ECR-12-013323	09AUG12	KH	TM

1 WIRE RANGE: 18-14 AWG

2 INSULATION RANGE:
3.30-5.08 [.130-.200] DIA.

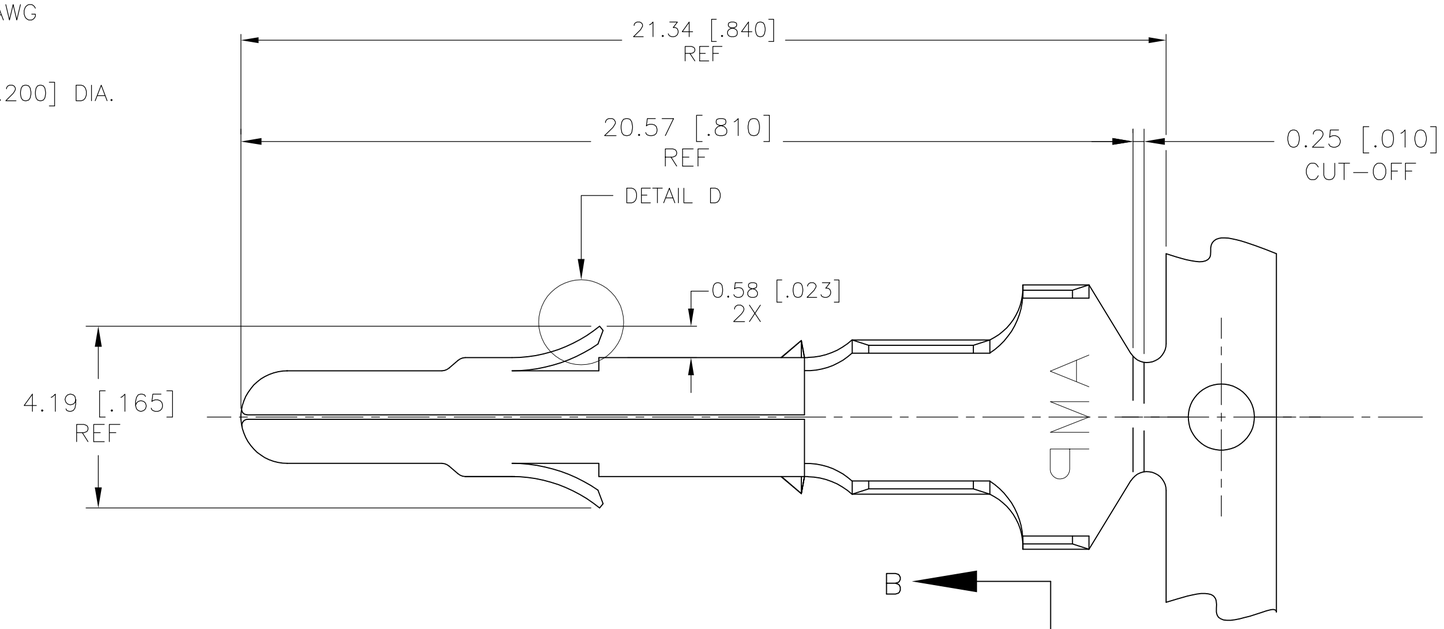

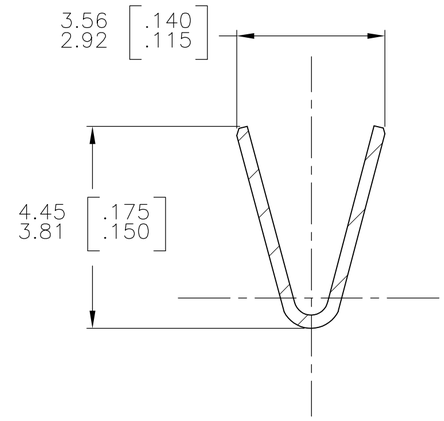

SECTION A-A

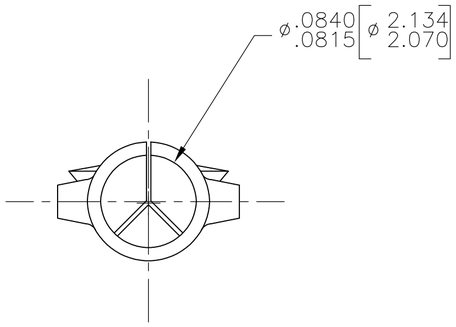

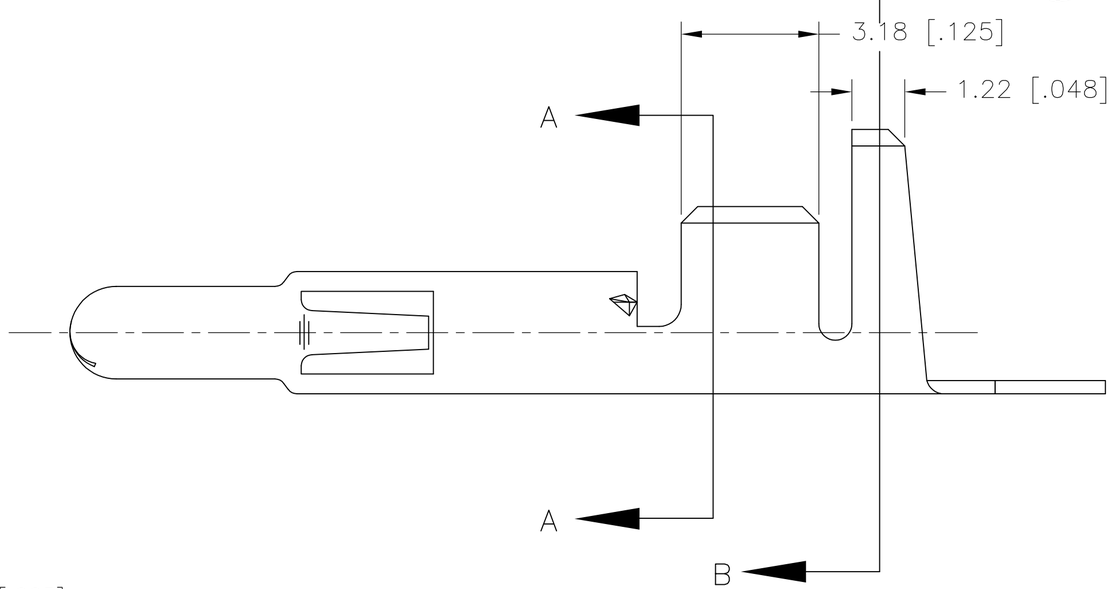

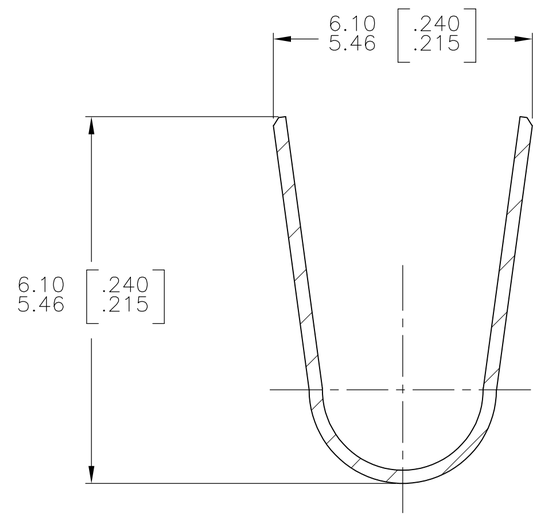

SECTION B-B

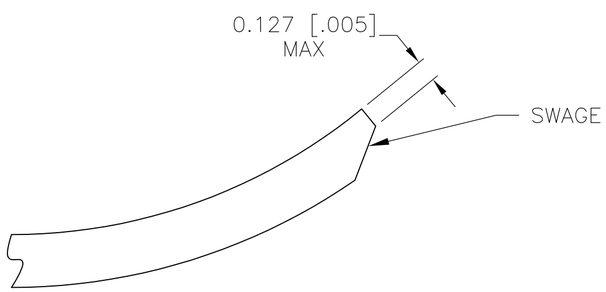

DETAIL D

350918-3	PRE-TIN	.012 PH. BRZ.	350873-3
——	PRE-TIN	.012 BRASS	350873-1
LOOSE PIECE REFERENCE	FINISH	MATERIAL	PART NUMBER

THIS DRAWING IS A CONTROLLED DOCUMENT.

DIMENSIONS: mm [INCHES]

TOLERANCES UNLESS OTHERWISE SPECIFIED:
0 PLC ±
1 PLC ±
2 PLC ±
3 PLC ± 0.38 [.015]
4 PLC ±
ANGLES ± 0°30'

MATERIAL

FINISH

DWN	S. HOOVER	04-FEB-2003
CHK	S. RIDGILL	04-FEB-2003
APVD	S. RIDGILL	04-FEB-2003

PRODUCT SPEC

APPLICATION SPEC

WEIGHT

TE Connectivity

NAME PIN, UNIVERSAL MATE-N-LOK™

SIZE	CAGE CODE	DRAWING NO	RESTRICTED TO
A2	00779	C-350873	—

CUSTOMER DRAWING | SCALE 10:1 | SHEET 1 OF 1 | REV V

350873

1471-9 (3/11)