Chipsmall Limited consists of a professional team with an average of over 10 year of expertise in the distribution of electronic components. Based in Hongkong, we have already established firm and mutual-benefit business relationships with customers from,Europe,America and south Asia,supplying obsolete and hard-to-find components to meet their specific needs.

With the principle of “Quality Parts,Customers Priority,Honest Operation,and Considerate Service”,our business mainly focus on the distribution of electronic components. Line cards we deal with include Microchip,ALPS,ROHM,Xilinx,Pulse,ON,Everlight and Freescale. Main products comprise IC,Modules,Potentiometer,IC Socket,Relay,Connector.Our parts cover such applications as commercial,industrial, and automotives areas.

We are looking forward to setting up business relationship with you and hope to provide you with the best service and solution. Let us make a better world for our industry!

# Contact us

Tel: +86-755-8981 8866 Fax: +86-755-8427 6832
Email & Skype: info@chipsmall.com Web: www.chipsmall.com
Address: A1208, Overseas Decoration Building, #122 Zhenhua RD., Futian, Shenzhen, China

NUMBER 353717

三角法 (3rd ANGLE PROJECTION)

METRIC

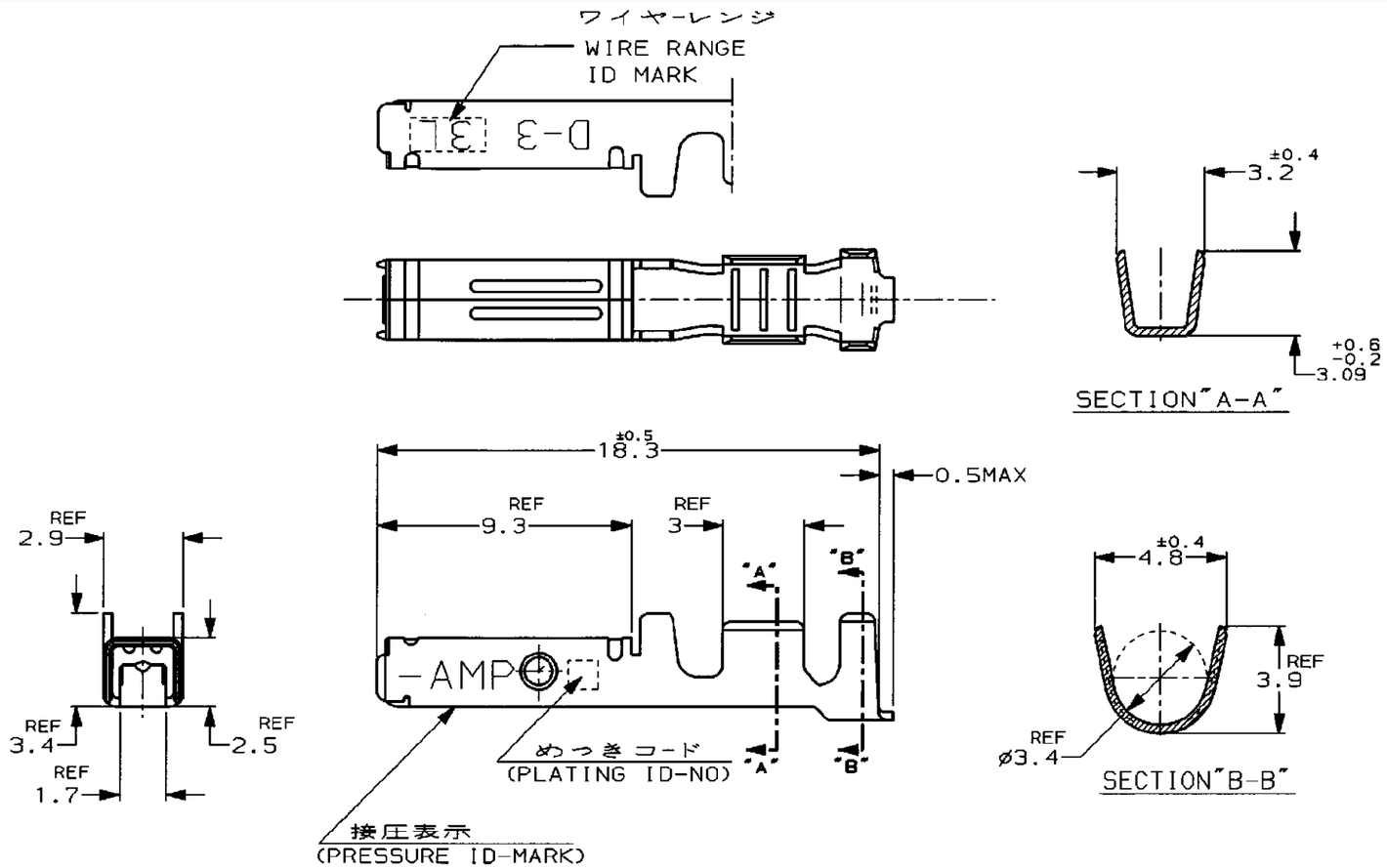


注記

1. 標準接圧型コンタクト：一般向け及び多極用
2. 高接圧型コンタクト：高電流用及び強振動用
3. 金めっきは接触部のみとする

NOTES

1. CONTACT TYPE;NORMAL PRESSURE TYPE(FOR GENERAL)
2. CONTACT TYPE;HIGH PRESSURE TYPE (FOR HIGH CURRENT OR ANTI-VIBRATION)
3. GOLD-PL. CONTACT AREA ONLY

| 備考(REMARK) 接点タイプ | 接圧表示(ID-MARK) (CONT. TYPE) | めっきコード (PL. ID NO) | 仕上(FINISH) | | 3 型番(P/N) |
|---|---|---|---|---|---|
| 2 | H | 5 | 光沢錫めっき(BRIGHT TIN-PL.) | 1- | -5 |
| | | 3 | 0.76μm最小金めっき(0.76μmMIN.Au-PL.) | 1- | -3 |
| | | 2 | 0.38μm最小金めっき(0.38μmMIN.Au-PL.) | 1- | -2 |
| 1 | | 3 | 0.76μm最小金めっき(0.76μmMIN.Au-PL.) | | -3 |
| | | 2 | 0.38μm最小金めっき(0.38μmMIN.Au-PL.) | 353717-2 | |

TE Connectivity

| | | | |
|---|---|---|---|
| 抱合電線断面積(WIRE RANGE) AWG 16-14 | 被覆外径(INSULATION DIA.) 3.1-3.8 mmø | 名称(NAME) (DYNAMIC SERIES REC. CONTACT) "3L" SIZE LOOSE PIECE ダイナミックシリーズリセプタクルコンタクト | |
| 材料(MATERIAL) (COPPER ALLOY) 銅合金 | 仕上(FINISH) (SEE TABLE) 表参照 | 一般公差 (GENERAL TOLERANCE) 10以下：±0.2 10を超え30以下：±0.25 30を超え100以下：±0.3 角度：±3° | SIZE B / LOC J / 番号(No.) 353717 |
| DR. 7/FEB/'97 K.IKEDA | DE. 7/FEB/'97 K.IKEDA | | 尺度(SCALE) 5-1 / REV. B1 / SHEET 1 OF 1 |
| CHK. 12/FEB/'97 Y.ISHIKAWA | APP. 12/FEB/'97 Y.ISHIKAWA | | |

| LTR | 変更 (REVISION RECORD) | DR | CHK | DATE |
|---|---|---|---|---|
| B1 | REVISED PER ECO-11-005294 | RK | HMR | 05APR11 |

PRINT DIST

U.855-111>U.DWG>5.C89-25173

単位:mm DIMENSIONS IN MM. DO NOT SCALE PRINT

(CUSTOMER DRAWING) 参考図面