Chipsmall Limited consists of a professional team with an average of over 10 year of expertise in the distribution of electronic components. Based in Hongkong, we have already established firm and mutual-benefit business relationships with customers from,Europe,America and south Asia,supplying obsolete and hard-to-find components to meet their specific needs.

With the principle of “Quality Parts,Customers Priority,Honest Operation,and Considerate Service”,our business mainly focus on the distribution of electronic components. Line cards we deal with include Microchip,ALPS,ROHM,Xilinx,Pulse,ON,Everlight and Freescale. Main products comprise IC,Modules,Potentiometer,IC Socket,Relay,Connector.Our parts cover such applications as commercial,industrial, and automotives areas.

We are looking forward to setting up business relationship with you and hope to provide you with the best service and solution. Let us make a better world for our industry!

Contact us

Tel: +86-755-8981 8866 Fax: +86-755-8427 6832
Email & Skype: info@chipsmall.com Web: www.chipsmall.com
Address: A1208, Overseas Decoration Building, #122 Zhenhua RD., Futian, Shenzhen, China

THIS DRAWING IS UNPUBLISHED. RELEASED FOR PUBLICATION 2011
© COPYRIGHT 2011 - ALL RIGHTS RESERVED.

LOC	DIST
GP	00

REVISIONS

P	LTR	DESCRIPTION	DATE	DWN	APVD
	F	REDRAWN PER ECO-12-008266	27AUG2012	CJV	CWR
	G	REVISED PER ECO-13-006091	30APR2013	CJV	CWR
	H	REVISED PER ECO-13-007439	09JUL2013	CJV	CWR

COVER IN PRE-CLAMPED POSITION

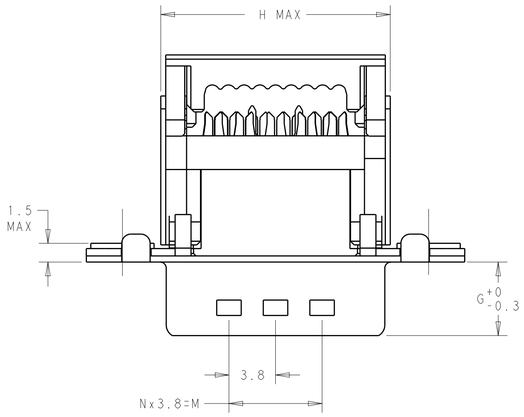

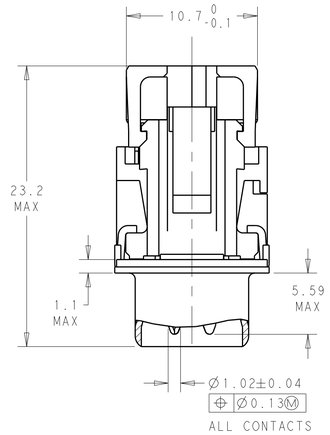

COVER IN CLAMPED POSITION WITH OPTIONAL STRAIN RELIEF ATTACHED

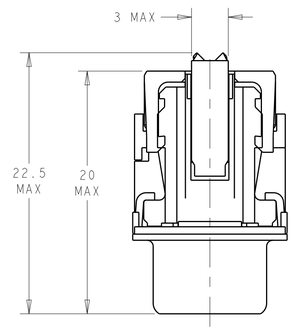

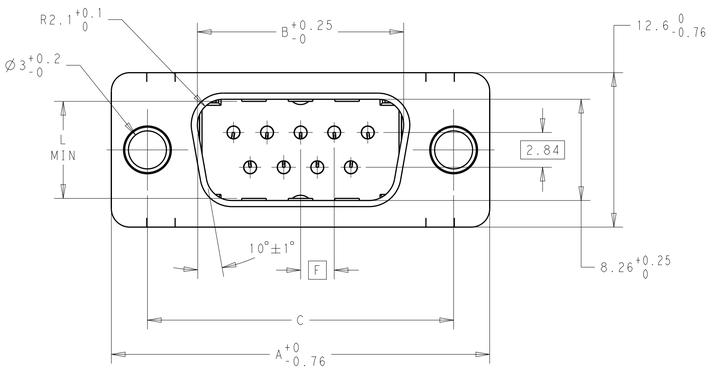

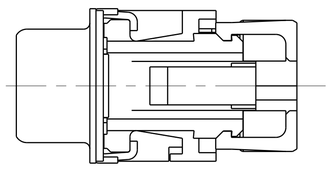

1. CABLES TO BE USED:
   ALL COMMERCIALLY AVAILABLE RIBBON CABLE WITH PVC INSULATION AND TIN OR SILVER PLATED COPPER WIRES. SEE WIRE INFORMATION IN TABLE BELOW.
2. 9 POSITION VERSION SHOWN.
3. USE ONLY WITH STRAIN RELIEF CLAMP.
4. OPTIONAL STRAIN RELIEF CLAMPS:
   9 POSITION = 4-1393560-3 (V42254-A4000-D9)
   15 POSITION = 4-1393560-5 (V42254-A4000-D15)
   25 POSITION = 4-1393560-6 (V42254-A4000-D25)
   37 POSITION = 4-1393560-7 (V42254-A4000-D37)
5. CONTACTS ARE STAMPED AND FORMED.
6. PACKAGED IN BLISTER PACKS.
7. PACKAGED ON REELS.
8. PLATING DETAILS: ALL MEET PERFORMANCE LEVEL 2 PER DIN 41652 P.2 AND P.4.
   UNDERPLATE: NICKEL OVER ENTIRE CONTACT
   CONTACT MATING SURFACE ALTERNATE 1: GOLD
   CONTACT MATING SURFACE ALTERNATE 2: GOLD FLASH OVER PALLADIUM-NICKEL
   IDC WIRE TERMINATION END: MATTE TIN
   SHELL PLATING: BRIGHT TIN OVER NICKEL
9. PRESS-ON COVER PROVIDED SEPARATELY (NOT PRE-ASSEMBLED)
10. FLANGES WITH M3 (BLACK) OR 4-40 (BLUE)
    SELF-LOCKING NUTS
    TORQUE RETENTION ≥ 70 N-cm
11. ALL PARTS MARKED WITH TE LOGO.

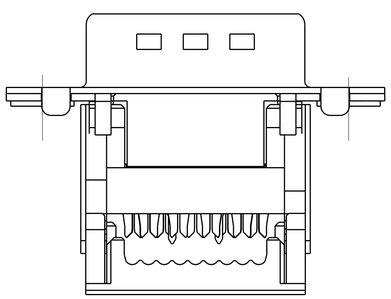

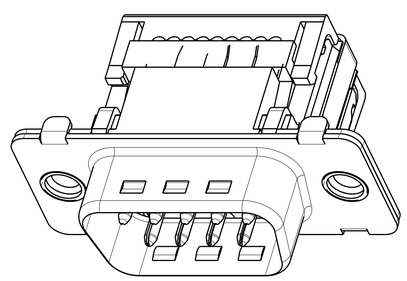

FLANGES WITH HOLES

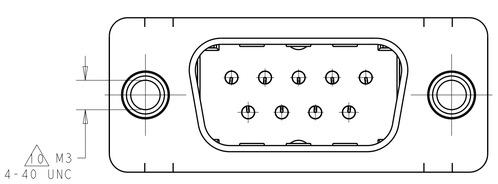

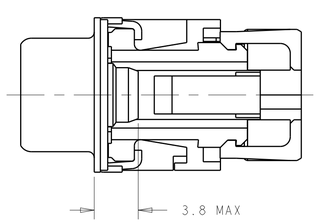

SELF-LOCKING NUT VERSION

WIRE INFORMATION

OVERALL CONDUCTOR CROSS-SECTIONAL AREA IN mm^2	AWG RANGE	OVERALL CONDUCTOR DIAMETER IN mm^2	NO. OF SINGLE STRANDED WIRES	CONDUCTOR	PVC INSULATING SLEEVE DIA
---	30	0.25 (3)	1	SOLID	1.0/1.1
---	28	0.32 (3)	1	SOLID	0.8/1.1
0.09 (3)	28	---	7	STRANDED	0.8/1.1
0.14	26	---	7	STRANDED	0.8/1.1

	STRAIN RELIEF	PKG	FLANGE OPTION	A	B	C	F	G	H	L	M	N	NO OF POSITIONS	SIEMENS PART NUMBER	TE CONNECTIVITY PART NUMBER
	Not Included	(6) (9)	3.0 DIAMETER HOLE	53.42	38.84	47.04 ±0.13	2.76	5.99	40.78	7.65	26.60	7	25	V42254-A6235-C225	1-1393487-8
	Included		3.0 DIAMETER HOLE	69.70	55.30	63.50 ±0.13	2.76	5.99	57.44	7.65	41.80	11	37	V42254-A5235-W235	6-1393486-2
	Included		3.0 DIAMETER HOLE	53.42	38.84	47.04 ±0.13	2.76	5.99	40.78	7.65	26.60	7	25	V42254-A5235-W234	6-1393486-1
	Included		3.0 DIAMETER HOLE	31.19	16.79	25.00 +0.12/-0.13	2.74	6.12	18.73	7.72	7.60	2	9	V42254-A5235-W232	5-1393486-9
	Not Included		3.0 DIAMETER HOLE	69.70	55.30	63.50 ±0.13	2.76	5.99	57.44	7.65	41.80	11	37	V42254-A5235-C237	4-1393486-6
	Not Included		3.0 DIAMETER HOLE	53.42	38.84	47.04 ±0.13	2.76	5.99	40.78	7.65	26.60	7	25	V42254-A5235-C225	4-1393486-4
	Not Included	(6)	3.0 DIAMETER HOLE	39.52	25.12	33.30 +0.15/-0.1	2.74	6.12	27.26	7.69	15.20	4	15	V42254-A5235-C215	4-1393486-3
	Not Included		3.0 DIAMETER HOLE	31.19	16.79	25.00 +0.12/-0.13	2.74	6.12	18.73	7.72	7.60	2	9	V42254-A5235-C209	4-1393486-2
OBSOLETE	Not Included		M3 SELF-LOCKING NUTS	31.19	16.79	25.00 +0.12/-0.13	2.74	6.12	18.73	7.72	7.60	2	9	V42254-A5234-C209	1-1393486-4
	Not Included		4-40 SELF-LOCKING NUTS	53.42	38.84	47.04 ±0.13	2.76	5.99	40.78	7.65	26.60	7	25	V42254-A5232-C225	9-1393485-3
	Not Included		4-40 SELF-LOCKING NUTS	39.52	25.12	33.30 +0.15/-0.1	2.74	6.12	27.26	7.69	15.20	4	15	V42254-A5232-C215	9-1393485-2
	Not Included		4-40 SELF-LOCKING NUTS	31.19	16.79	25.00 +0.12/-0.13	2.74	6.12	18.73	7.72	7.60	2	9	V42254-A5232-C209	9-1393485-1
OBSOLETE	Not Included	(7)	4-40 SELF-LOCKING NUTS	39.52	25.12	33.30 +0.15/-0.1	2.74	6.12	27.26	7.69	15.20	4	15	V42254-A4232-C215	6-1393485-8

THIS DRAWING IS A CONTROLLED DOCUMENT. DIMENSIONING AND TOLERANCING PER ASME Y14.5M-2009

DIMENSIONS: mm

TOLERANCES UNLESS OTHERWISE SPECIFIED:
0 PLC ±-
1 PLC ±-
2 PLC ±-
3 PLC ±-
4 PLC ±-
ANGLES ±1°

MATERIAL - -
FINISH - -

DWN RAGHAVENDRA 03MAR2012
CHK CARL ROHDE 03MAR2012
APVD CARL ROHDE 03MAR2012
PRODUCT SPEC -
APPLICATION SPEC -
WEIGHT -

TE Connectivity

NAME D-SUB IDC PLUGS WITH GROUNDING FINGERS -

SIZE	CAGE CODE	DRAWING NO	RESTRICTED TO
A1	00779	C-9-1393485-1	-

CUSTOMER DRAWING | SCALE 4:1 | SHEET 1 OF 1 | REV H

4805 (3/11)