Chipsmall Limited consists of a professional team with an average of over 10 year of expertise in the distribution of electronic components. Based in Hongkong, we have already established firm and mutual-benefit business relationships with customers from,Europe,America and south Asia,supplying obsolete and hard-to-find components to meet their specific needs.

With the principle of “Quality Parts,Customers Priority,Honest Operation,and Considerate Service”,our business mainly focus on the distribution of electronic components. Line cards we deal with include Microchip,ALPS,ROHM,Xilinx,Pulse,ON,Everlight and Freescale. Main products comprise IC,Modules,Potentiometer,IC Socket,Relay,Connector.Our parts cover such applications as commercial,industrial, and automotives areas.

We are looking forward to setting up business relationship with you and hope to provide you with the best service and solution. Let us make a better world for our industry!

Contact us

Tel: +86-755-8981 8866 Fax: +86-755-8427 6832
Email & Skype: info@chipsmall.com Web: www.chipsmall.com
Address: A1208, Overseas Decoration Building, #122 Zhenhua RD., Futian, Shenzhen, China

THIS DRAWING IS UNPUBLISHED. RELEASED FOR PUBLICATION -.- .
© COPYRIGHT - BY TYCO ELECTRONICS CORPORATION. ALL RIGHTS RESERVED.

LOC	DIST
GZ	00

REVISIONS

P	LTR	DESCRIPTION	DATE	DWN	APVD
	O	0720-0346-04	02JUN04	KH	HT

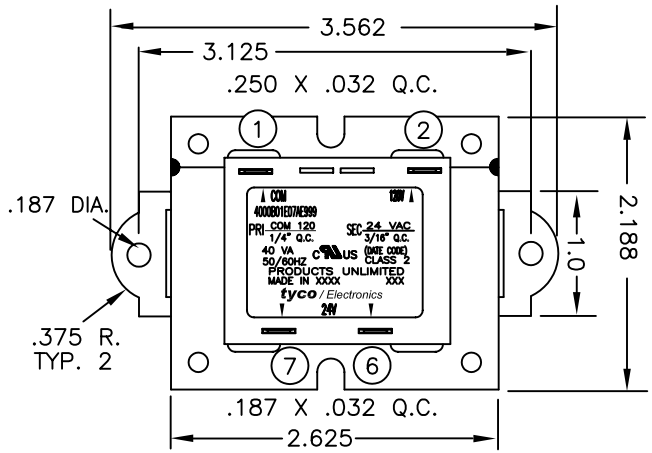

NOTES
1. DIMENSIONS FOR REFERENCE ONLY.
2. WINDING PROTECTION-INHERENTLY LIMITING

CERTIFICATION: UL/CUL FILE NO E87824

PRIMARY

TERM NO.	1	2	3	4	5
VOLTAGE	COM	120			
TERMINAL WIDTH	.250	.250			
TERMINAL THICKNESS	.032	.032			

SECONDARY

TERM NO.	6	7	8	9
VOLTAGE	24	VAC		
TERMINAL WIDTH	.187	.187		
TERMINAL THICKNESS	.032	.032		

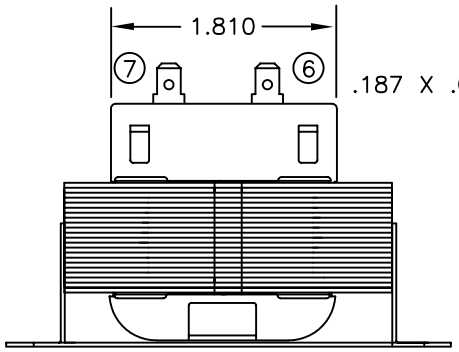

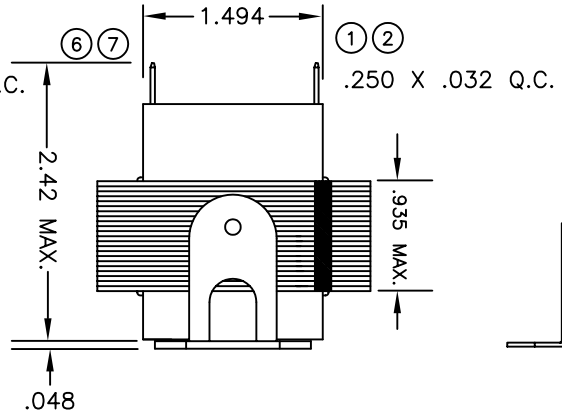

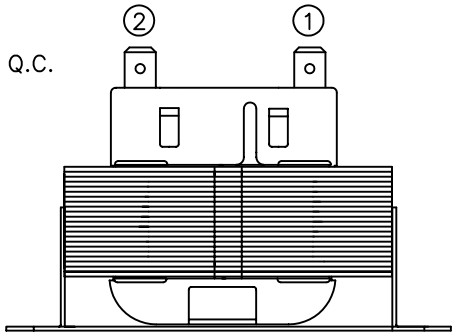

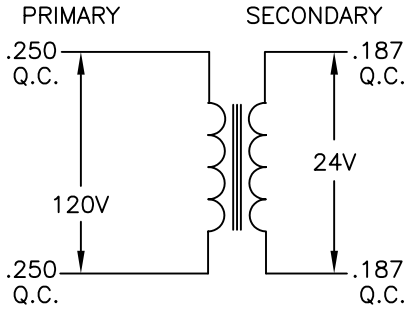

SCHEMATIC

TYCO PART NUMBER
6-1611471-8

THIS DRAWING IS A CONTROLLED DOCUMENT.

DIMENSIONS: INCHES

TOLERANCES UNLESS OTHERWISE SPECIFIED:
0 PLC ± -
1 PLC ± -
2 PLC ± .010
3 PLC ± .005
4 PLC ± -
ANGLES ± -

MATERIAL -
FINISH -

DWN K.H. 02JUN04
CHK -
APVD DH
PRODUCT SPEC -
APPLICATION SPEC -
WEIGHT -

Products UNLIMITED
Tyco Electronics Corporation
Harrisburg, PA 17105-3608

NAME
TRANSFORMER OUTLINE
P.U. STOCK

SIZE	CAGE CODE	DRAWING NO	RESTRICTED TO
A3	00779	C-4000B01E07AE999	

CUSTOMER DRAWING | SCALE NTS | SHEET 1 OF 1 | REV O

AMP 1470-19 REV 31MAR2000