Chipsmall Limited consists of a professional team with an average of over 10 year of expertise in the distribution of electronic components. Based in Hongkong, we have already established firm and mutual-benefit business relationships with customers from,Europe,America and south Asia,supplying obsolete and hard-to-find components to meet their specific needs.

With the principle of “Quality Parts,Customers Priority,Honest Operation,and Considerate Service”,our business mainly focus on the distribution of electronic components. Line cards we deal with include Microchip,ALPS,ROHM,Xilinx,Pulse,ON,Everlight and Freescale. Main products comprise IC,Modules,Potentiometer,IC Socket,Relay,Connector.Our parts cover such applications as commercial,industrial, and automotives areas.

We are looking forward to setting up business relationship with you and hope to provide you with the best service and solution. Let us make a better world for our industry!

Contact us

Tel: +86-755-8981 8866 Fax: +86-755-8427 6832
Email & Skype: info@chipsmall.com Web: www.chipsmall.com
Address: A1208, Overseas Decoration Building, #122 Zhenhua RD., Futian, Shenzhen, China

NET IMPEDANCE (Z)					
Frequency	0.5 MHz	1 MHz	5 MHz	10 MHz	25 MHz
Nominal (REF)	53 Ω	60 Ω	48 Ω	39 Ω	35 Ω
Minimum	40 Ω	45 Ω	36 Ω	29 Ω	26 Ω

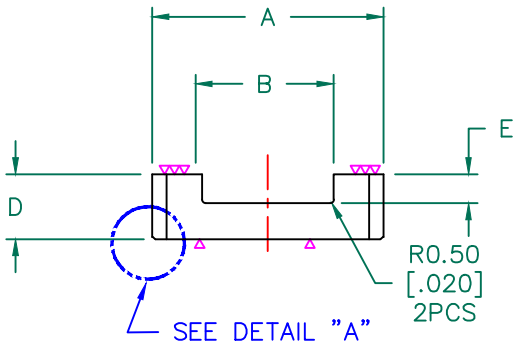

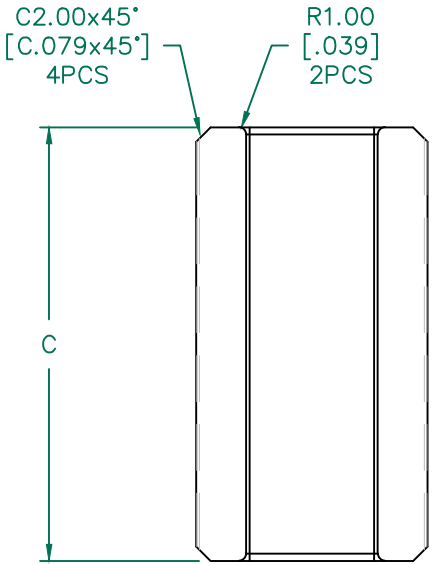

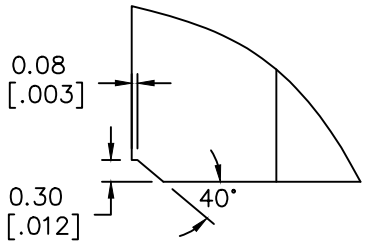

DETAIL "A"

FERRITE CORE DIMENSIONS (SPEC): mm [in]

A	32.00 [1.260]	±	0.60 [.024]
B	18.20 [.717]	±	0.40 [.016]
C	60.00 [2.362]	±	1.00 [.039]
D	9.00 [.354]	±	0.20 [.008]
E	4.00 [.157]	±	0.25 [.010]

WEIGHT/1000 62.47 kgs [137.70 Lbs]

NOTES: UNLESS OTHERWISE SPECIFIED

1. COSMETIC SPECIFICATION REFER TO WI-QA-038.
2. THE CONTACT SURFACE NEED TO BE POLISHED.

RoHS

DIMENSIONS ARE IN mm[INCHES].

REV	DESCRIPTION	DATE	INT
C	ADD CHAMFER	07/24/17	QIU
B	ADD Z SPEC @ 10/25MHz	01/10/17	Jcai
A	ORIGINAL DRAFT	09/20/16	Jcai

This print is the property of Laird Tech. and is loaned in confidence subject to return upon request and with the understanding that no copies shall be made without the written consent of Laird Tech. All rights to design or invention are reserved.

Laird

PROJECT/PART NUMBER:	REV	PART TYPE:	DRAWN BY:
40U1260-180	C	CNZ CORE	Jcai

DATE:	SCALE:	MATERIAL:
09/20/16	1 : 1	Ferrite
CAD # 40U1260-180-C	TOOL # U1260	