Chipsmall Limited consists of a professional team with an average of over 10 year of expertise in the distribution of electronic components. Based in Hongkong, we have already established firm and mutual-benefit business relationships with customers from,Europe,America and south Asia,supplying obsolete and hard-to-find components to meet their specific needs.

With the principle of “Quality Parts,Customers Priority,Honest Operation,and Considerate Service”,our business mainly focus on the distribution of electronic components. Line cards we deal with include Microchip,ALPS,ROHM,Xilinx,Pulse,ON,Everlight and Freescale. Main products comprise IC,Modules,Potentiometer,IC Socket,Relay,Connector.Our parts cover such applications as commercial,industrial, and automotives areas.

We are looking forward to setting up business relationship with you and hope to provide you with the best service and solution. Let us make a better world for our industry!

Contact us

Tel: +86-755-8981 8866 Fax: +86-755-8427 6832
Email & Skype: info@chipsmall.com Web: www.chipsmall.com
Address: A1208, Overseas Decoration Building, #122 Zhenhua RD., Futian, Shenzhen, China

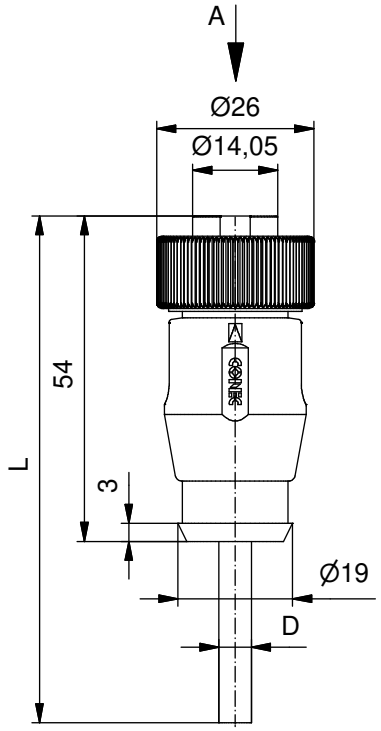

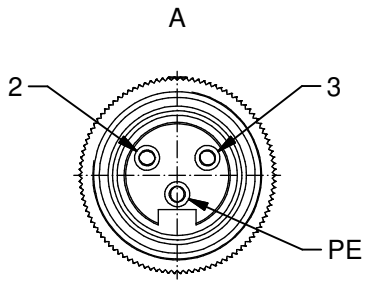

Contact assignment:

PE green-yellow
2 brown
3 blue

Technical specification:

Rated voltage: IEC 60664-1	300 V	
Overvoltage category: IEC 60664-1	2	
Overvoltage: IEC 60664-1	2,7 kV	
Current rating: IEC 60512-3 at 40°C	0,75mm² 8 A	1,5mm² 12 A
Insulation resistance: IEC 60512	>=100 MΩ	
Pollution degree: IEC 60664-1	3/2	
Degree of protection: IEC 60529	IP 68, in mated condition	
Temperature range: IEC 60664-1	-30°C ... +80°C	
Mating cycles: IEC 60512-9a	>=100	
Termination:	crimped	

Materials:

Contact:	CuZn
Contact plating:	Nickel, gold plated
Contact carrier:	TPU, UL 94
Coupling nut:	CuZn, nickel plated
Moulding body:	TPU, UL 94, grey

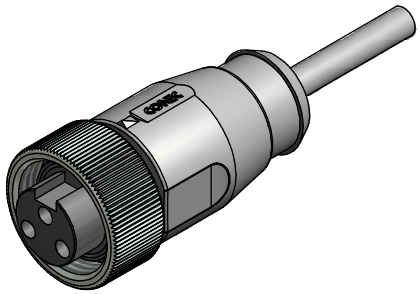

Part no:	Description:	Length L:	Cable:
41-01000	SAL - 7/8 - RK2PE - 2 / A6	2m	PVC, UL 20207, grey, 3x0,75mm² Cable: 781-A67300
41-01001	SAL - 7/8 - RK2PE - 3 / A6	3m	
41-01002	SAL - 7/8 - RK2PE - 5 / A6	5m	
41-01003	SAL - 7/8 - RK2PE - 10 / A6	10m	
41-xxxxx	SAL - 7/8 - RK2PE - ... / A6	x	
41-01097	SAL - 7/8 - RK2PE - 2 / A6 / 150	2m	PVC, UL 20207, grey, 3x1,50mm² Cable: 781-A68300
41-01098	SAL - 7/8 - RK2PE - 3 / A6 / 150	3m	
41-01099	SAL - 7/8 - RK2PE - 5 / A6 / 150	5m	
41-01100	SAL - 7/8 - RK2PE - 10 / A6 / 150	10m	
41-xxxxx	SAL - 7/8 - RK2PE - ... / A6 / 150	x	

D see data sheet cable

DO NOT ALTER CAD DRAWING BY HAND
Directive 2002/95/EC RoHS compliant

Index: b 09.02.11 VF Ä3891
cable type changed, technical specification changed, part no. cable in table added, neutral line added

tolerance of cable: L <= 4m: L + 40mm; L > 4m: L + 1%

general tolerance: 0 ± 0,50mm; 0,0 ± 0,25mm; 0,00 ± 0,10mm

THIS DRAWING MAY NOT BE COPIED OR REPRODUCED IN ANY WAY, AND MAY NOT BE PASSED ON TO A THIRD PARTY WITHOUT WRITTEN PERMISSION. OWNERSHIP AND COPYRIGHT OF CONEC GmbH

dim. in mm

	date	name
drawn	19.10.07	Mankopf
appd.	19.10.07	Franz

title: Female connector 7/8" axial

dwg no: 41K1A313

part no: see table