Chipsmall Limited consists of a professional team with an average of over 10 year of expertise in the distribution of electronic components. Based in Hongkong, we have already established firm and mutual-benefit business relationships with customers from,Europe,America and south Asia,supplying obsolete and hard-to-find components to meet their specific needs.

With the principle of “Quality Parts,Customers Priority,Honest Operation,and Considerate Service”,our business mainly focus on the distribution of electronic components. Line cards we deal with include Microchip,ALPS,ROHM,Xilinx,Pulse,ON,Everlight and Freescale. Main products comprise IC,Modules,Potentiometer,IC Socket,Relay,Connector.Our parts cover such applications as commercial,industrial, and automotives areas.

We are looking forward to setting up business relationship with you and hope to provide you with the best service and solution. Let us make a better world for our industry!

Contact us

Tel: +86-755-8981 8866 Fax: +86-755-8427 6832
Email & Skype: info@chipsmall.com Web: www.chipsmall.com
Address: A1208, Overseas Decoration Building, #122 Zhenhua RD., Futian, Shenzhen, China

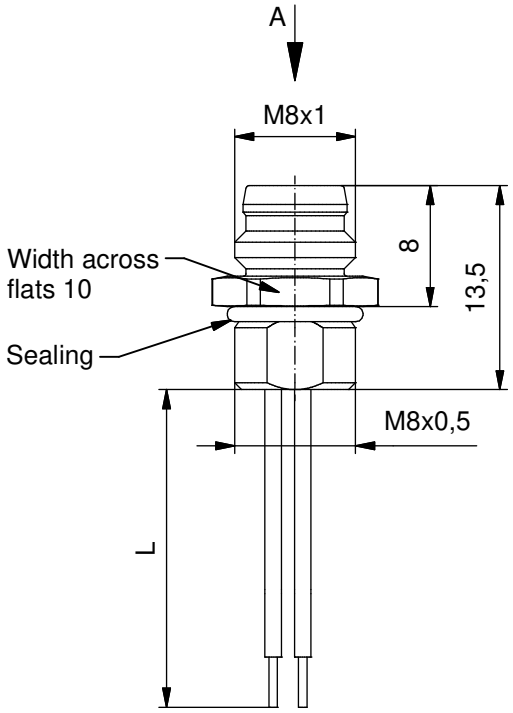

Technical specification:

Rated voltage: IEC 61076-2-104	3pos 60 V	4pos 30V
Current rating: IEC 61076-2-104	3pos 3A at 40℃	4pos 3A at 40℃
Insulation resistance: IEC 60512	>=100 MΩ	
Pollution degree: IEC 60664-1	3/2	
Degree of protection: IEC 60529	IP 67, in mated condition	
Temperature range: IEC 60664-1	-30℃ ... +80℃	
Mating cycles: IEC 60512-9a	>=100	

Materials:

Contact:	CuZn
Contact plating:	Nickel, gold plated
Contact carrier:	PA6, UL 94
Sealing:	NBR
Socket housing:	CuZn, nickel plated
Grouting:	Polyurethane-resin, UL 94

Installation specification:

Recommended torque:	0,6 - 0,8 Nm
Conec installation tool:	Torque wrench: 36-000200 Insert across flats 10: 36-000270

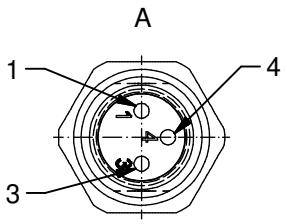

Contact assignment:

1 brown
3 blue
4 black

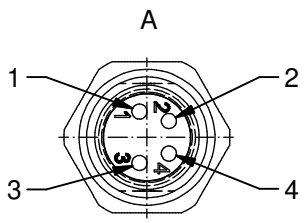

Contact assignment:

1 brown
2 white
3 blue
4 black

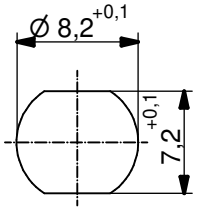

Minimum wall thickness 1,5mm, alternativ panel cut-out d=8,2

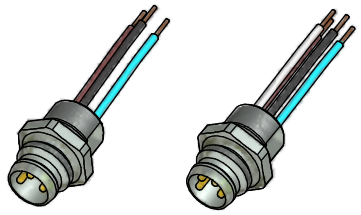

Part no:	Description:	Pos	Length L:	Wire:
42-01032	SAL - 8 - FS3 - 0,2	3	0,2m	AWG 24 PVC, UL
42-xxxxx	SAL - 8 - FS3 - ...	3	x	
42-01033	SAL - 8 - FS4 - 0,2	4	0,2m	
42-xxxxx	SAL - 8 - FS4 - ...	4	x	

DO NOT ALTER CAD DRAWING BY HAND

Directive 2002/95/EC RoHS compliant

Index: c 24.08.11 VF Ä3941
data sheet revised

tolerance of wire: L <= 0,5m: L + 20mm; L > 0,5m: L + 4%

general tolerance: 0 ± 0,50mm; 0,0 ± 0,25mm; 0,00 ± 0,10mm

THIS DRAWING MAY NOT BE COPIED OR REPRODUCED IN ANY WAY, AND MAY NOT BE PASSED ON TO A THIRD PARTY WITHOUT WRITTEN PERMISSION. OWNERSHIP AND COPYRIGHT OF CONEC GmbH

dim. in mm

	date	name
drawn	27.10.09	Burschik
appd.	27.10.09	Schmidt

title: Male socket M8x1 with wire, frontmounting

dwg no: 42K1A152

part no: see table