Chipsmall Limited consists of a professional team with an average of over 10 year of expertise in the distribution of electronic components. Based in Hongkong, we have already established firm and mutual-benefit business relationships with customers from,Europe,America and south Asia,supplying obsolete and hard-to-find components to meet their specific needs.

With the principle of “Quality Parts,Customers Priority,Honest Operation,and Considerate Service”,our business mainly focus on the distribution of electronic components. Line cards we deal with include Microchip,ALPS,ROHM,Xilinx,Pulse,ON,Everlight and Freescale. Main products comprise IC,Modules,Potentiometer,IC Socket,Relay,Connector.Our parts cover such applications as commercial,industrial, and automotives areas.

We are looking forward to setting up business relationship with you and hope to provide you with the best service and solution. Let us make a better world for our industry!

Contact us

Tel: +86-755-8981 8866 Fax: +86-755-8427 6832
Email & Skype: info@chipsmall.com Web: www.chipsmall.com
Address: A1208, Overseas Decoration Building, #122 Zhenhua RD., Futian, Shenzhen, China

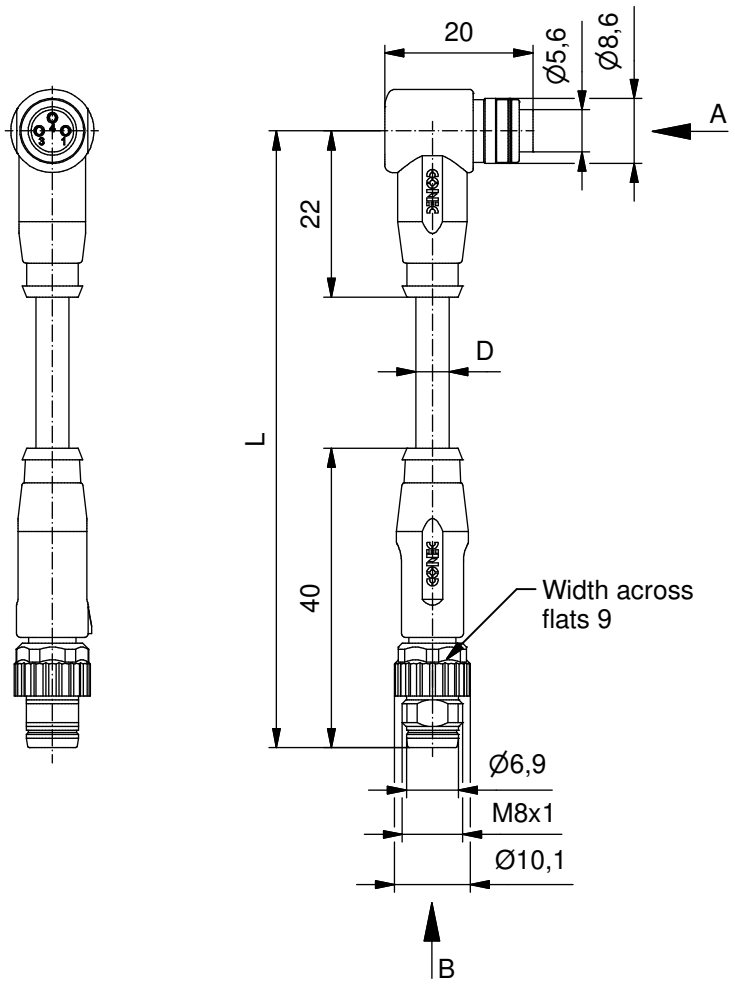

Technical specification :

Rated voltage: IEC 61076-2-104	60 V
Current rating: IEC 61076-2-104	3 A at 40°C
Insulation resistance: IEC 60512	>=100 MΩ
Pollution degree: IEC 60664-1	3/2
Degree of protection: IEC 60529	IP 67, in mated condition
Temperature range: IEC 60664-1	-30°C ... +80°C
Mating cycles: IEC 60512-9a	>=100

Materials:

Contact:	CuZn
Contact plating:	Nickel, gold plated
Contact carrier:	TPU GF, UL 94
Coupling screw:	GD-Zn, nickel plated
Moulding body:	TPU, UL 94, grey

Installation specification:

Recommended torque:	0,4 Nm
Conec installation tool:	Torque wrench: 36-000200 Insert across flats 9: 36-000210

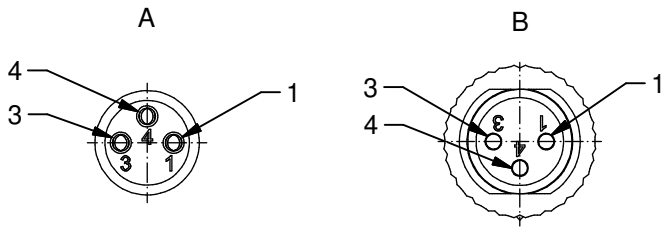

Contact assignment:

1 brown
3 blue
4 black

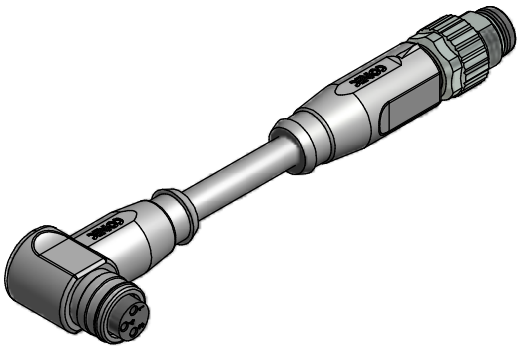

Part no:	Description:	Length L:	Cable:
42-10181	SAL - 8 - RKWS3 - RSU3 - 0,3 / A1	0,3m	PVC, grey, 3x0,25mm² Cable: 781-A12300
42-10182	SAL - 8 - RKWS3 - RSU3 - 0,6 / A1	0,6m	
42-10183	SAL - 8 - RKWS3 - RSU3 - 1,5 / A1	1,5m	
42-10184	SAL - 8 - RKWS3 - RSU3 - 3 / A1	3,0m	
42-xxxxx	SAL - 8 - RKWS3 - RSU3 - ... / A1	x	

D see data sheet cable

DO NOT ALTER CAD DRAWING BY HAND

Directive 2002/95/EC RoHS compliant

Index: a 24.03.11 VF Ä3945
Coupling screw modified, spanner flats added, data sheet modified

tolerance of cable: L <= 4m: L + 40mm
L > 4m: L + 1%

THIS DRAWING MAY NOT BE COPIED OR REPRODUCED IN ANY WAY, AND MAY NOT BE PASSED ON TO A THIRD PARTY WITHOUT WRITTEN PERMISSION.
OWNERSHIP AND COPYRIGHT OF CONEC GmbH

dim. in mm

	date	name
drawn	13.12.07	Franz
appd.	13.12.07	Mankopf

title: Connecting cable, female connector ø8 angled snap - male connector M8x1 axial screw/ snap

dwg no: 42K1A045

part no: see table