Chipsmall Limited consists of a professional team with an average of over 10 year of expertise in the distribution of electronic components. Based in Hongkong, we have already established firm and mutual-benefit business relationships with customers from,Europe,America and south Asia,supplying obsolete and hard-to-find components to meet their specific needs.

With the principle of “Quality Parts,Customers Priority,Honest Operation,and Considerate Service”,our business mainly focus on the distribution of electronic components. Line cards we deal with include Microchip,ALPS,ROHM,Xilinx,Pulse,ON,Everlight and Freescale. Main products comprise IC,Modules,Potentiometer,IC Socket,Relay,Connector.Our parts cover such applications as commercial,industrial, and automotives areas.

We are looking forward to setting up business relationship with you and hope to provide you with the best service and solution. Let us make a better world for our industry!

Contact us

Tel: +86-755-8981 8866 Fax: +86-755-8427 6832
Email & Skype: info@chipsmall.com Web: www.chipsmall.com
Address: A1208, Overseas Decoration Building, #122 Zhenhua RD., Futian, Shenzhen, China

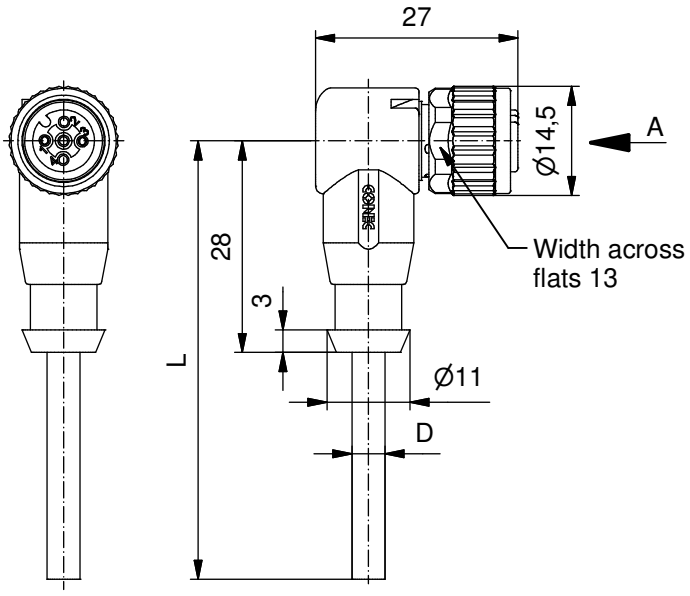

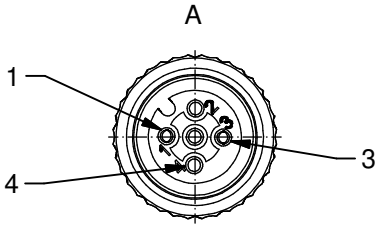

Technical specification:

Rated voltage: IEC 61076-2-101	3pos 250 V
Current rating: IEC 61076-2-101	4 A at 40℃
Insulation resistance: IEC 60512	>=100 MΩ
Pollution degree: IEC 60664-1	3/2
Degree of protection: IEC 60529	IP 67, in mated condition
Temperature range: IEC 60664-1	-30℃ ... +80℃
Mating cycles: IEC 60512-9a	>=100

Materials:

Contact:	CuZn
Contact plating:	Nickel, gold plated
Contact carrier:	TPU GF, UL 94
Sealing:	FPM
Coupling nut:	GD-Zn, nickel plated
Moulding body:	TPU, UL 94, grey

Installation specification:

Recommended torque:	0,6 Nm
Conec installation tool:	Torque wrench: 36-000200 Insert across flats 13: 36-000220

Contact assignment:

1) brown
3) blue
4) black

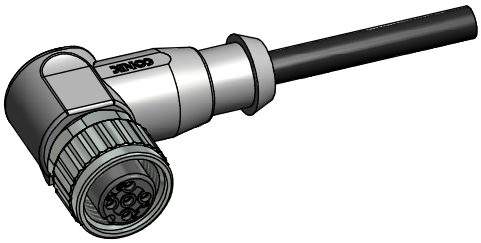

Part no:	Description:	Length L:	Cable:
43-10180	SAL - 12 - RKW3 - 2 / K1	2m	TPU, UL 20549, black, 3x0,34mm² Cable: 781-K13300
43-10181	SAL - 12 - RKW3 - 3 / K1	3m	
43-10182	SAL - 12 - RKW3 - 5 / K1	5m	
43-10183	SAL - 12 - RKW3 - 10 / K1	10m	
43-xxxxx	SAL - 12 - RKW3 - ... / K1	x	

D see data sheet cable

DO NOT ALTER CAD DRAWING BY HAND

Directive 2002/95/EC RoHS compliant

Index: b 11.10.10 VF Ä3767
Coupling nut modified, spanner flats added, data sheet modified

tolerance of cable: L <= 4m: L + 40mm; L > 4m: L + 1%

general tolerance: 0 ± 0,50mm; 0,0 ± 0,25mm; 0,00 ± 0,10mm

THIS DRAWING MAY NOT BE COPIED OR REPRODUCED IN ANY WAY, AND MAY NOT BE PASSED ON TO A THIRD PARTY WITHOUT WRITTEN PERMISSION. OWNERSHIP AND COPYRIGHT OF CONEC GmbH

dim. in mm

	date	name
drawn	08.03.07	Burschik
appd.	08.03.07	Mankopf

title: Female connector M12x1 angled

dwg no: 43K1A362

part no: see table