Chipsmall Limited consists of a professional team with an average of over 10 year of expertise in the distribution of electronic components. Based in Hongkong, we have already established firm and mutual-benefit business relationships with customers from,Europe,America and south Asia,supplying obsolete and hard-to-find components to meet their specific needs.

With the principle of “Quality Parts,Customers Priority,Honest Operation,and Considerate Service”,our business mainly focus on the distribution of electronic components. Line cards we deal with include Microchip,ALPS,ROHM,Xilinx,Pulse,ON,Everlight and Freescale. Main products comprise IC,Modules,Potentiometer,IC Socket,Relay,Connector.Our parts cover such applications as commercial,industrial, and automotives areas.

We are looking forward to setting up business relationship with you and hope to provide you with the best service and solution. Let us make a better world for our industry!

Contact us

Tel: +86-755-8981 8866 Fax: +86-755-8427 6832
Email & Skype: info@chipsmall.com Web: www.chipsmall.com
Address: A1208, Overseas Decoration Building, #122 Zhenhua RD., Futian, Shenzhen, China

MARKETING SALES DRAWING

DIMENSIONS IN INCHES - DO NOT SCALE THIS DRAWING
DIMENSIONS IN METRIC - [ ]

This drawing is the property of Tusonix, Inc., and may not be used, reproduced, published or disclosed to others without expressed authorization by Tusonix Inc.

Electrical Testing per Tusonix standard test plans and Mil-Std-202 Test Methods.

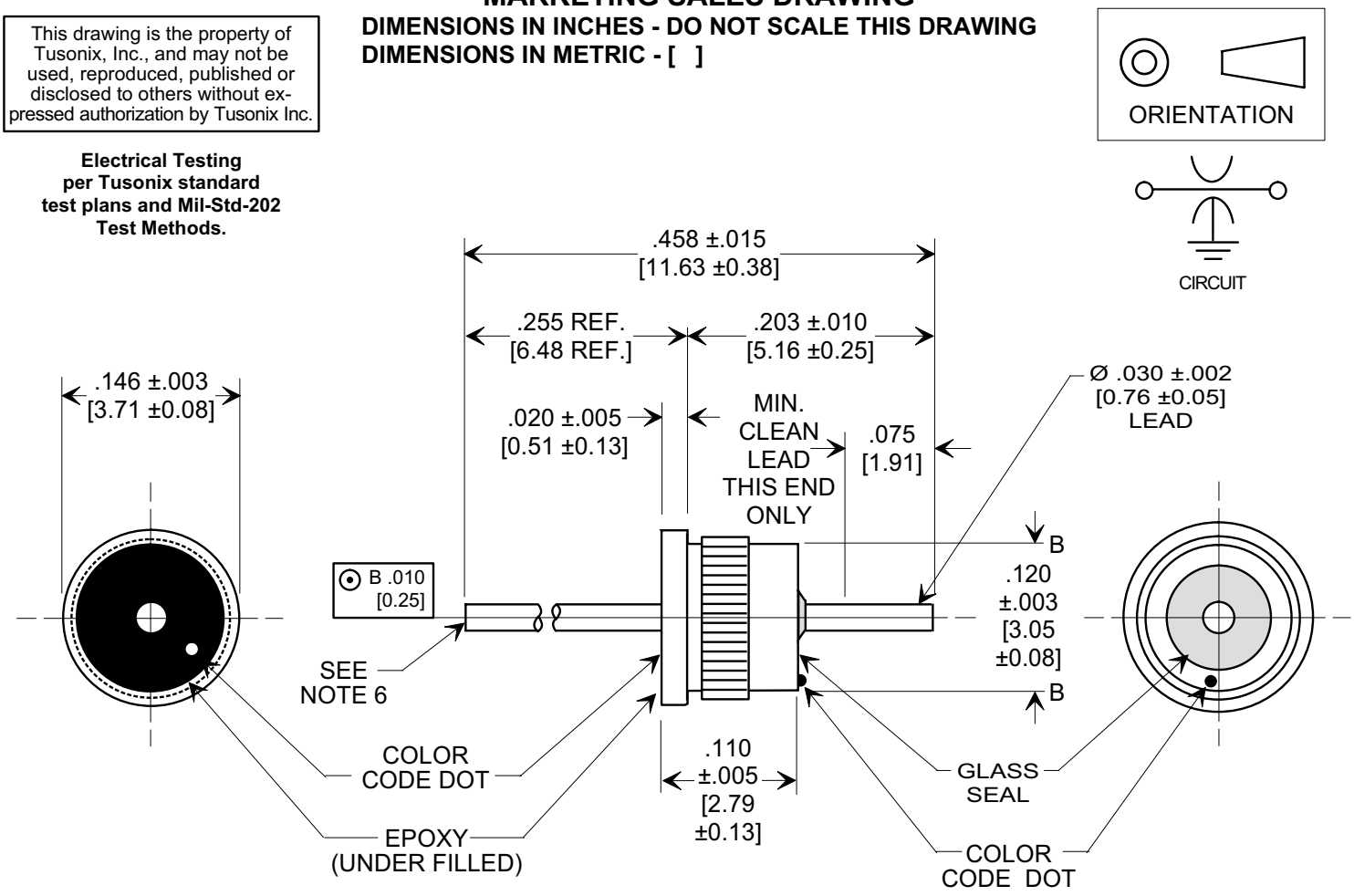

NOTES:
1. OPERATING TEMPERATURE RANGE -55° C TO +125° C.
2. GOLD PLATED CASE AND LEAD.
3. EPOXY SEALED ON OPPOSITE END FROM GLASS SEAL.
4. PROPER INSTALLATION REQUIRES FIRM, STEADY PRESSURE UNTIL FLANGE IS FULLY SEATED.
5. RECOMMENDED MOUNTING HOLE: .128/.129 [3.25/3.28] DIA.
6. END OF LEAD INDICATED TO BE FREE OF BURRS.
7. TUSONIX STANDARD PART NUMBER: 4306-011.
   TUSONIX RoHS COMPLIANT PART NUMBER: 4306-011 LF.
   CUSTOMER MUST SPECIFY STANDARD OR RoHS PART NUMBER WHEN ORDERING.
8. RoHS COMPLIANT PART MARKED WITH ADDITIONAL GREEN DOT FOR IDENTIFICATION.

Cx (pF)	TOL.	DC WORKING VOLTAGE		DC CURRENT (AMPS)	I.R. MIN.	D.W.V.	MIN. NO LOAD INSERTION LOSS (dB) @ 25° C PER MIL-STD-220					COLOR CODE
		85°C	125°C				1 MHz	10 MHz	100 MHz	1GHz	10 GHz	
27,000	+100% -0%	70	50	5	10 GΩ	150 VDC	----	28	45	65	70	RED/RED

REVISION RECORD
0
Original Release
C.O. 20060919-1-01

--TOLERANCES--
Unless Otherwise Specified
DECIMAL ±
ANGLES ±

TUSONIX
TUCSON, ARIZONA

Title
PRESS-IN EMI FILTER

Drawn S.M. 09-19-06
Scale 7 X
Approved T.C. 09-19-06

A
4306-011