Chipsmall Limited consists of a professional team with an average of over 10 year of expertise in the distribution of electronic components. Based in Hongkong, we have already established firm and mutual-benefit business relationships with customers from,Europe,America and south Asia,supplying obsolete and hard-to-find components to meet their specific needs.

With the principle of “Quality Parts,Customers Priority,Honest Operation,and Considerate Service”,our business mainly focus on the distribution of electronic components. Line cards we deal with include Microchip,ALPS,ROHM,Xilinx,Pulse,ON,Everlight and Freescale. Main products comprise IC,Modules,Potentiometer,IC Socket,Relay,Connector.Our parts cover such applications as commercial,industrial, and automotives areas.

We are looking forward to setting up business relationship with you and hope to provide you with the best service and solution. Let us make a better world for our industry!

Contact us

Tel: +86-755-8981 8866 Fax: +86-755-8427 6832
Email & Skype: info@chipsmall.com Web: www.chipsmall.com
Address: A1208, Overseas Decoration Building, #122 Zhenhua RD., Futian, Shenzhen, China

This drawing is the property of Tusonix, Inc., and may not be used, reproduced, published or disclosed to others without expressed authorization by Tusonix Inc.

DATA SHEET DRAWING

Electrical testing per Tusonix standard test plans and MIL-Std-202 test methods.

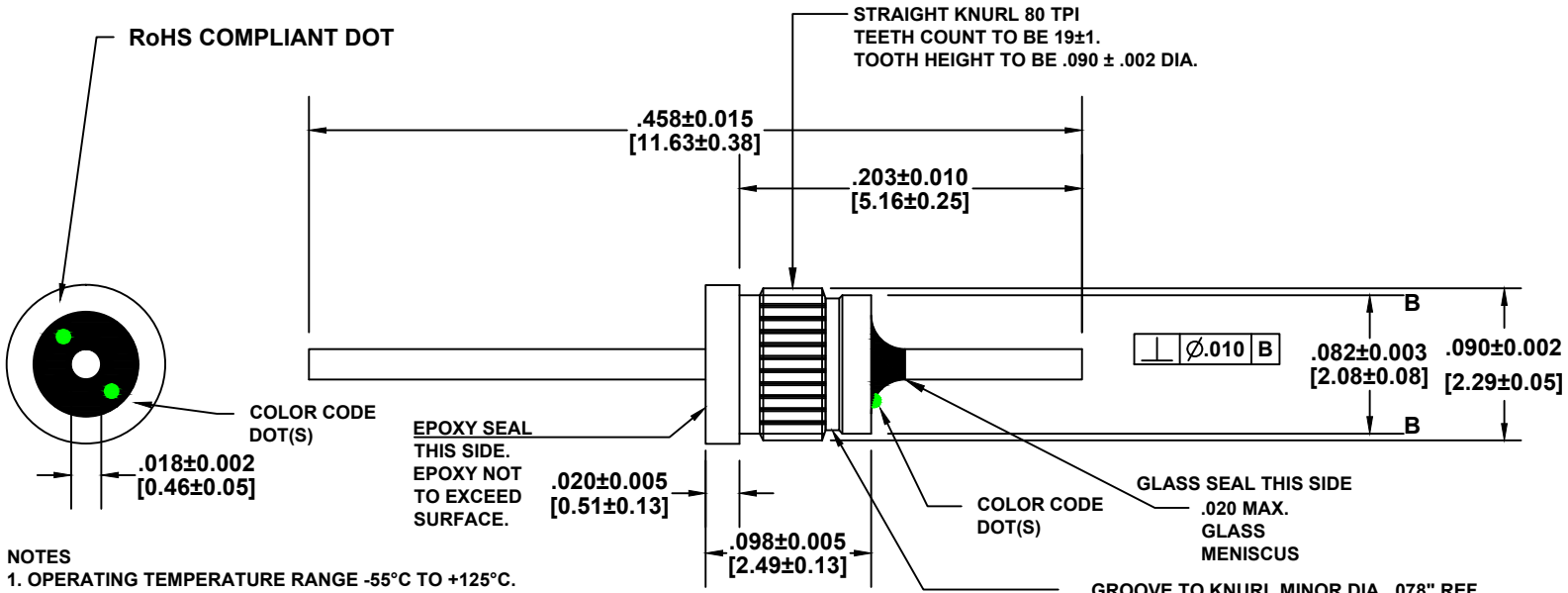

NOTES
1. OPERATING TEMPERATURE RANGE -55°C TO +125°C.
2. GOLD PLATED CASE AND LEAD.
3. EPOXY SEALED ON THE OPPOSITE END FROM THE GLASS SEAL.
4. PROPER INSTALLATION REQUIRES FIRM STEADY PRESSURE UNTIL FLANGE IS FULLY SEATED.
5. RECOMMENDED MOUNTING HOLE: .085±.001 [2.18±0.01]
6. END OF LEAD INDICATED TO BE FREE OF BURRS.
7. TUSONIX NON-RoHS COMPLIANT PART NUMBER: 4310-012.
   TUSONIX RoHS COMPLIANT PART NUMBER: 4310-012LF.
   CUSTOMER MUST SPECIFY NON-RoHS OR RoHS PART NUMBER WHEN ODERING.
8. COLOR CODE: GREEN. RoHS COMPLIANT PART MARKED WITH ADDITIONAL GREEN DOT FOR IDENTIFICATION.

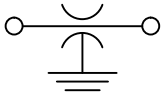

CIRCUIT

Cx (pF)		DC WORKING VOLTAGE		I DC	I.R. MIN @ 100 VDC	DWV
100	+100% -0%	85°C 300	125°C 200	1A	10 G Ω	500 VDC

TYPICAL NO LOAD INSERTION LOSS (dB) @ 25°C PER MIL-STD-220

10 MHz	100 MHz	1 GHz	10 GHz
- - - -	3	20	28

DIMENSIONS:
ENGLISH UNITS - INCHES
METRIC UNITS - [mm]

ORIENTATION

TUSONIX
A Subsidiary of CTS Electronic Components
TUCSON, ARIZONA

--TOLERANCES--
Unless Otherwise Specified

2 Place Decimal ±	.01
3 Place Decimal ±	.005
Angles ±	5 °

Title **MINIATURE PRESS-IN EMI FILTER**

Dwn R.C. 05-06-15 | Ckd R.C. 05-06-15

Material SEE NOTES

Scale: NOT TO SCALE

Sheet 1 of 1

A | 4310-012

REVISION RECORD

REV	DATE	CHG BY	CHANGE
A	05-06-15	R.C.	ORIGINAL RELEASE
B	09-19-16	R.C.	MODIFIED DOT PLACEMENT, NOTE 5 HOLE DIM., EPOXY FILL NOTE.