Chipsmall Limited consists of a professional team with an average of over 10 year of expertise in the distribution of electronic components. Based in Hongkong, we have already established firm and mutual-benefit business relationships with customers from,Europe,America and south Asia,supplying obsolete and hard-to-find components to meet their specific needs.

With the principle of “Quality Parts,Customers Priority,Honest Operation,and Considerate Service”,our business mainly focus on the distribution of electronic components. Line cards we deal with include Microchip,ALPS,ROHM,Xilinx,Pulse,ON,Everlight and Freescale. Main products comprise IC,Modules,Potentiometer,IC Socket,Relay,Connector.Our parts cover such applications as commercial,industrial, and automotives areas.

We are looking forward to setting up business relationship with you and hope to provide you with the best service and solution. Let us make a better world for our industry!

Contact us

Tel: +86-755-8981 8866 Fax: +86-755-8427 6832
Email & Skype: info@chipsmall.com Web: www.chipsmall.com
Address: A1208, Overseas Decoration Building, #122 Zhenhua RD., Futian, Shenzhen, China

4312 GL

DC axial compact fan

ebm-papst St. Georgen GmbH & Co. KG
Hermann-Papst-Str. 1
D-78112 St. Georgen
Phone +49 (0) 7724 81-0
Fax +49 (0) 7724 81-1309
info2@de.ebmpapst.com
www.ebmpapst.com

Nominal data

Type	4312 GL	
Nominal voltage	VDC	12
Nominal voltage range	VDC	6 .. 15
Speed (rpm)	min^{-1}	1550
Power consumption	W	1.2
Min. ambient temperature	°C	-20
Max. ambient temperature	°C	75
Air flow	m^3/h	95
Sound power level	B	4.3
Sound pressure level	dB(A)	30

ml = Max. load · me = Max. efficiency · fa = Free air · cs = Customer specification · ce = Customer equipment
Subject to change

DC axial compact fan

Technical description

Housing material	Glass-fiber reinforced PBT plastic
Impeller material	Glass-fiber reinforced PA plastic
Weight	0.220 kg
Dimensions	119 x 119 x 32 mm
Airflow direction	Exhaust over struts
Direction of rotation	Clockwise, viewed toward rotor
Storage	Sintec sleeve bearing
Service life L10 at 40 °C	80000 h
Service life L10 at maximum temperature	35000 h
Cable	Leads AWG 22, TR 64, stripped and tin-plated.
Motor protection	Protection against reverse polarity and blocked rotor.
Locked-rotor protection	Locked-rotor and overload protection
Approval	VDE, CSA, UL, CE
Option	Vario-Pro

ebm-papst St. Georgen GmbH & Co. KG · Hermann-Papst-Str. 1 · D-78112 St. Georgen · Phone +49 (0) 7724 81-0 · Fax +49 (0) 7724 81-1309 · info2@de.ebmpapst.com · www.ebmpapst.com

DC axial compact fan

Product drawing

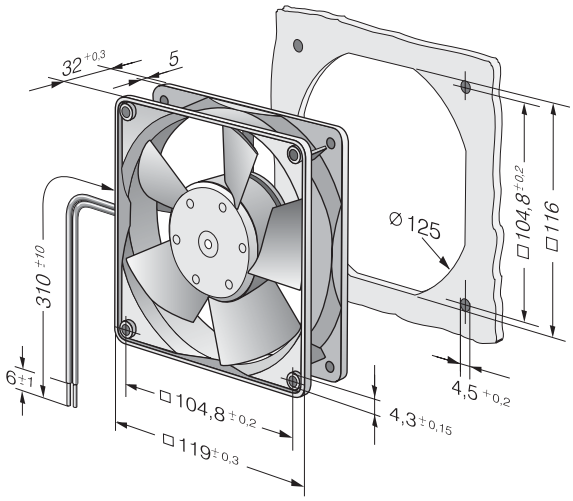

ebm-papst St. Georgen GmbH & Co. KG · Hermann-Papst-Str. 1 · D-78112 St. Georgen · Phone +49 (0) 7724 81-0 · Fax +49 (0) 7724 81-1309 · info2@de.ebmpapst.com · www.ebmpapst.com

DC axial compact fan

Curves: Air performance

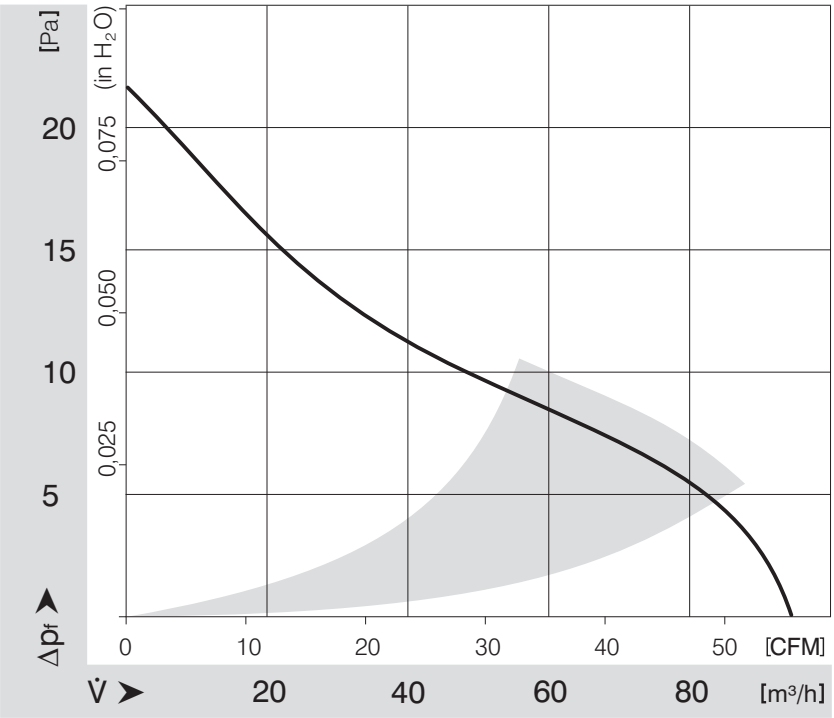

ebm-papst St. Georgen GmbH & Co. KG · Hermann-Papst-Str. 1 · D-78112 St. Georgen · Phone +49 (0) 7724 81-0 · Fax +49 (0) 7724 81-1309 · info2@de.ebmpapst.com · www.ebmpapst.com