Chipsmall Limited consists of a professional team with an average of over 10 year of expertise in the distribution of electronic components. Based in Hongkong, we have already established firm and mutual-benefit business relationships with customers from,Europe,America and south Asia,supplying obsolete and hard-to-find components to meet their specific needs.

With the principle of “Quality Parts,Customers Priority,Honest Operation,and Considerate Service”,our business mainly focus on the distribution of electronic components. Line cards we deal with include Microchip,ALPS,ROHM,Xilinx,Pulse,ON,Everlight and Freescale. Main products comprise IC,Modules,Potentiometer,IC Socket,Relay,Connector.Our parts cover such applications as commercial,industrial, and automotives areas.

We are looking forward to setting up business relationship with you and hope to provide you with the best service and solution. Let us make a better world for our industry!

Contact us

Tel: +86-755-8981 8866 Fax: +86-755-8427 6832
Email & Skype: info@chipsmall.com Web: www.chipsmall.com
Address: A1208, Overseas Decoration Building, #122 Zhenhua RD., Futian, Shenzhen, China

THIS DRAWING IS UNPUBLISHED. RELEASED FOR PUBLICATION ,19 .
© COPYRIGHT 19 BY AMP INCORPORATED. ALL RIGHTS RESERVED.

LOC	DIST
FT	69

REVISIONS

P	LTR	DESCRIPTION	DATE	DWN	APVD
	H	REDWN ON CAD PER EC 0320-285-97	11-22-95	AH	MH

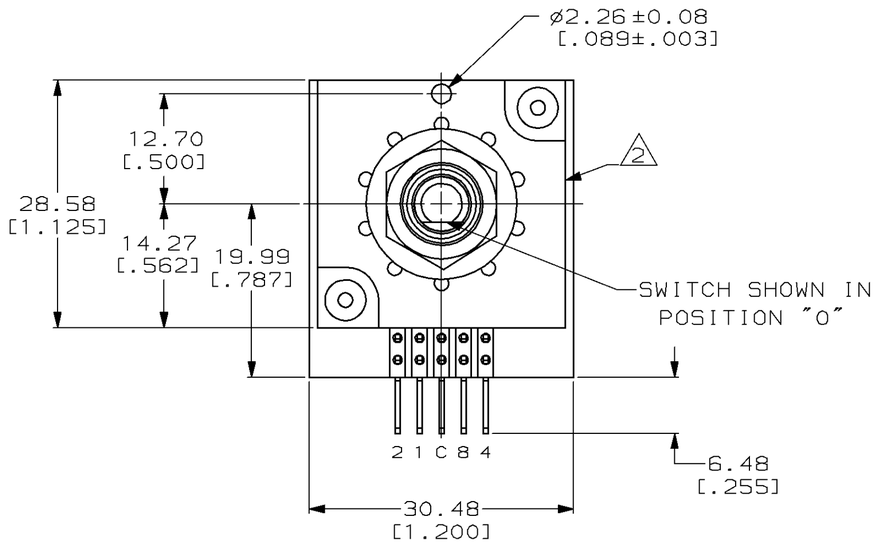

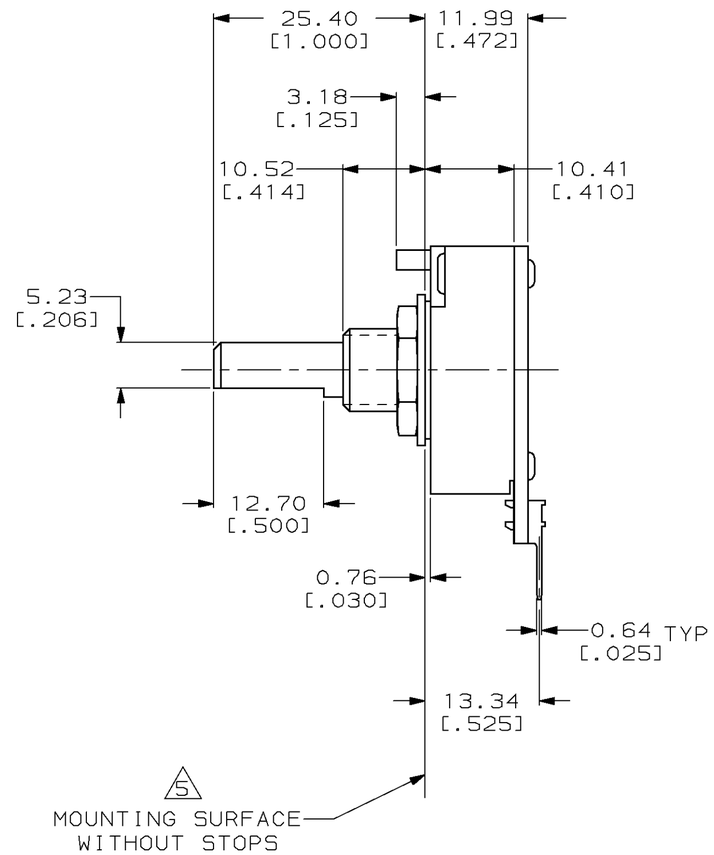

1. SWITCH HOUSING IS MADE OF BLACK POLYESTER.

2. AMP, AMP PART NO., AND DATE CODE TO BE STAMPED WHITE ON THIS SURFACE.

3. FOR ADDITIONAL SWITCH SPECIFICATIONS SEE AMP PRODUCT SPEC 108-7518.

4. SWITCH POSITIONS INCREASE WHEN ROTATED IN A CLOCKWISE DIRECTION.

5. TWO 0.51[.020] THICK STOPS 435889-1 (NOT SHOWN) ARE INSTALLED BETWEEN WASHER AND HOUSING IN A NON-FUNCTIONAL POSITION. WHEN LIMITED ROTATION OF SWITCH IS DESIRED THE TOP SURFACE OF THE TOP STOP BECOMES THE MOUNTING SURFACE, THIS ALTERS DIMENSIONS FROM MOUNTING SURFACE.

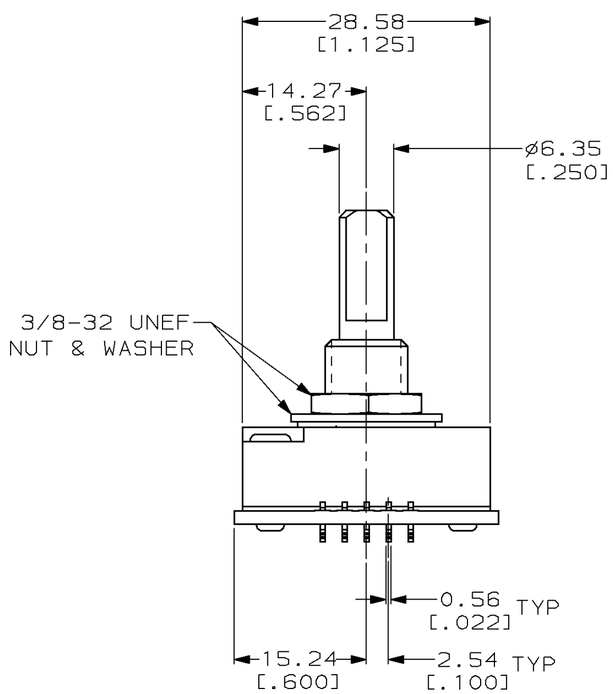

COMMON TO	POSITION 0	1	2	3	4	5	6	7	8	9
1		●		●		●		●		●
2			●	●			●	●		
4					●	●	●	●		
8									●	●

BCD

435984-1

435984-1
PART NO

THIS DRAWING IS A CONTROLLED DOCUMENT FOR AMP INCORPORATED. IT IS SUBJECT TO CHANGE AND THE CONTROLLING ENGINEERING ORGANIZATION SHOULD BE CONTACTED FOR THE LATEST REVISION.

DIMENSIONS: mm [INCHES]

TOLERANCES UNLESS OTHERWISE SPECIFIED:
0 PLC ±-
1 PLC ±-
2 PLC ±0.25[.010]
3 PLC ±-
4 PLC ±-
ANGLES ±-

MATERIAL -
FINISH -

DWN A.HOLT 11-22-95
CHK R.TALLEY 11-22-95
APVD M.HUDDLESTON 11-22-95
PRODUCT SPEC 3
APPLICATION SPEC -
WEIGHT -

CUSTOMER DRAWING

AMP
AMP Incorporated
Harrisburg, PA 17105-3608

NAME
SWITCH ASSEMBLY, 10 POSITION, 36° THROW, 3100 SERIES

SIZE	CAGE CODE	DRAWING NO		
A2	00779	C-435984-1		
SCALE 2:1		SHEET 1 OF 1		REV H