Chipsmall Limited consists of a professional team with an average of over 10 year of expertise in the distribution of electronic components. Based in Hongkong, we have already established firm and mutual-benefit business relationships with customers from,Europe,America and south Asia,supplying obsolete and hard-to-find components to meet their specific needs.

With the principle of “Quality Parts,Customers Priority,Honest Operation,and Considerate Service”,our business mainly focus on the distribution of electronic components. Line cards we deal with include Microchip,ALPS,ROHM,Xilinx,Pulse,ON,Everlight and Freescale. Main products comprise IC,Modules,Potentiometer,IC Socket,Relay,Connector.Our parts cover such applications as commercial,industrial, and automotives areas.

We are looking forward to setting up business relationship with you and hope to provide you with the best service and solution. Let us make a better world for our industry!

Contact us

Tel: +86-755-8981 8866 Fax: +86-755-8427 6832
Email & Skype: info@chipsmall.com Web: www.chipsmall.com
Address: A1208, Overseas Decoration Building, #122 Zhenhua RD., Futian, Shenzhen, China

444040	DO NOT SCALE	METRIC	3rd ANGLE PROJECTION
-2 -1	DIMENSIONS IN mm.		

REQ. PER. ASSY				ITEM No	DESCRIPTION	MATERIAL	FINISH
		-	1	1	HOUSING, 2 POSN., MULTI LOCK REC.	PA. 6·6 Ⓓ	VERDE / GREEN
		1	1	2	SPACER, 2 POSN., MULTI LOCK REC.	PA. 6·6	AMARELO / YELLOW
		-	1	3	SEAL RING 2 POSN.	FLUOR SILICONE	MARROM VERMELHO / REDDISH BROWN
		1	-	3	SEAL RING 2 POSN.	SILICONE	VERDE / GREEN
		1	-	1	HOUSING, 2 POSN., MULTI LOCK REC.	PA. 6·6 Ⓓ	PRETO / BLACK

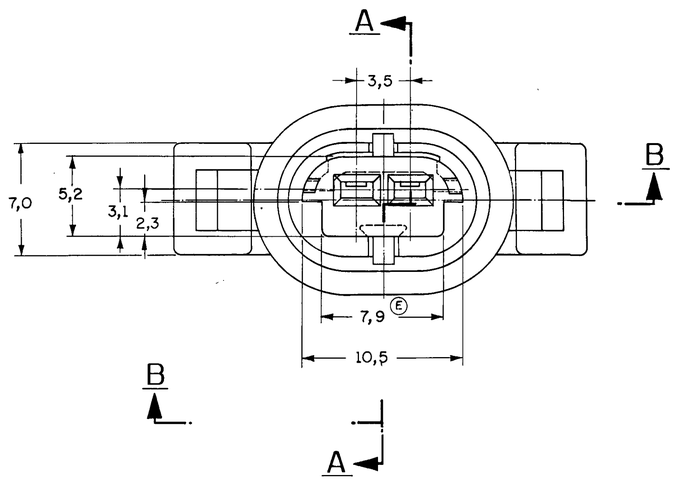

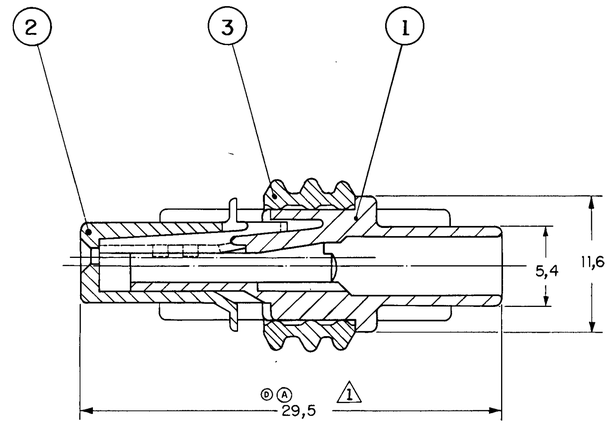

CORTE - A A

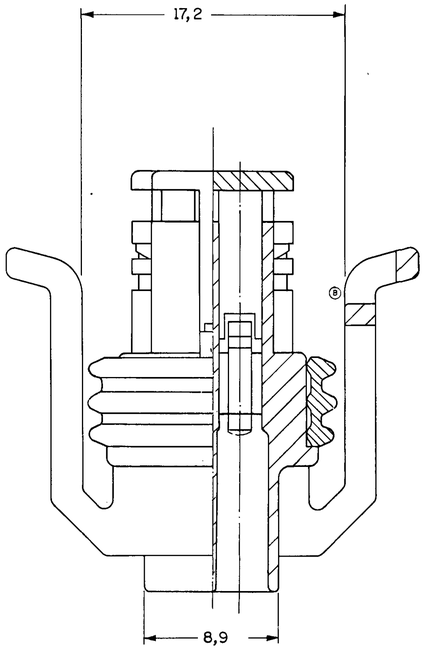

CORTE - B B

INFORMAÇÕES DA CONTRA-PEÇA Ⓓ

MATING CONNECTOR INFORMATION

SCALE 2,5:1

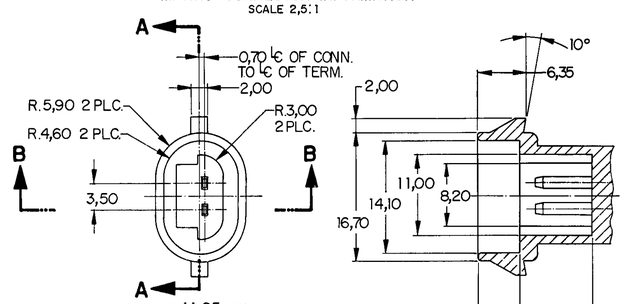

SECÇÃO A·A

SECTION

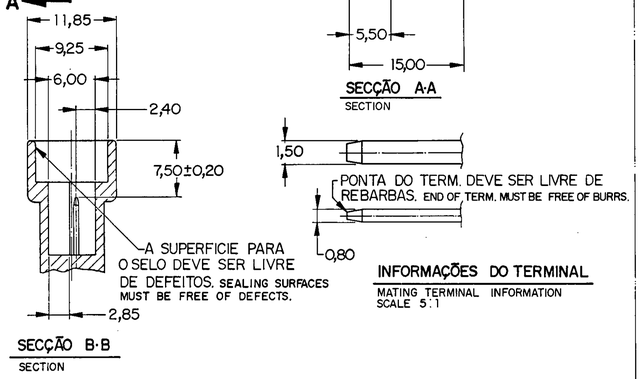

SECÇÃO B·B

SECTION

INFORMAÇÕES DO TERMINAL

MATING TERMINAL INFORMATION

SCALE 5:1

TOLERANCIA NÃO ESPECIFICADA = ±0,10

TOLERANCE NOT SPECIFIED.

1 - AS TRAVAS DEVEM ESTAR NA POSIÇÃO COMO MOSTRADO.
- THE LOCKS MUST BE IN SHOWED POSITION.

2 - GRAVAÇÕES QUE DEVERÃO CONSTAR:
- MARCA REGISTRADA AMP, NÚMERO DA PEÇA AMP, IDENTIFICAÇÃO DE CIRCUITO, NÚMERO DE CAVIDADE.

- STAMP THAT MUST BE EVIDENT:
- TRADEMARK AMP, PART NUMBER AMP, CIRCUIT IDENTIFICATION, MANUFACTURER COUNTRY CODE, CAVITY IDENTIFICATION.

OTHER TREATMENT	FINISH	MATERIAL	PART NUMBER
CUSTOMER DWG			

SS	REVISION RECORD	DR	CHK	DATE
E	ERA 8,0 EC:LB-399-93	Dori		04-Nov-93
D1	REVISADO EC-241-93	Briz		20-07-93
D	REVISADO EC 098-93	PF		14-MAY-93
C	REVISADO ECN	PF		30-12-92
B	REVISADO ECN-3343	Briz		11-09-92
A	ERA 27,7	Briz		21-Aug-92
0	ERA P91-29306	DORI		9-Jul-92

THIS DRAWING IS UNPUBLISHED | RELEASED FOR PUBLICATION ,19

© COPYRIGHT 19 BY AMP DO BRASIL LTDA. S.P. ALL INTERNATIONAL RIGHTS RESERVED. AMP PRODUCTS MAY BE COVERED BY U.S. AND FOREIGN PATENTS AND/OR PATENTS PENDING

TOLERANCES UNLESS OTHERWISE STATED DEC. ±0,3 ANGLES ±1°

DR. H.R. Briz 9-Jan.-92

CHK. 08-DEC-92

DE

APP. 07 JUL 92

INS DIA RANGE | WIRE RANGE | SCALE 5:1

AMP — AMP do BRASIL LTDA. São Paulo, Brasil

DESCRIPTION HOUSING ASSY, 2 POSN. MULTI LOCK RECEP.

A1 | DWG NO C444040 | SHEET 1 of 1

C444040 SHEET 1 of 1

This information is confidential and is disclosed to you on condition that no further disclosure is made by you to other than AMP personnel without written authorization from AMP DO BRASIL - S.P.

PRINT DISTN