Chipsmall Limited consists of a professional team with an average of over 10 year of expertise in the distribution of electronic components. Based in Hongkong, we have already established firm and mutual-benefit business relationships with customers from,Europe,America and south Asia,supplying obsolete and hard-to-find components to meet their specific needs.

With the principle of “Quality Parts,Customers Priority,Honest Operation,and Considerate Service”,our business mainly focus on the distribution of electronic components. Line cards we deal with include Microchip,ALPS,ROHM,Xilinx,Pulse,ON,Everlight and Freescale. Main products comprise IC,Modules,Potentiometer,IC Socket,Relay,Connector.Our parts cover such applications as commercial,industrial, and automotives areas.

We are looking forward to setting up business relationship with you and hope to provide you with the best service and solution. Let us make a better world for our industry!

Contact us

Tel: +86-755-8981 8866 Fax: +86-755-8427 6832
Email & Skype: info@chipsmall.com Web: www.chipsmall.com
Address: A1208, Overseas Decoration Building, #122 Zhenhua RD., Futian, Shenzhen, China

DRAWING MADE IN THIRD ANGLE PROJECTION

THIS DRAWING IS UNPUBLISHED. RELEASED FOR PUBLICATION ,19 .
© COPYRIGHT 19 BY AMP INCORPORATED. ALL INTERNATIONAL RIGHTS RESERVED.

LOC	DIST	P	F
DF	XO		

REVISIONS

ZONE	LTR	DESCRIPTION	DATE	APPD
	0	RELEASED NPR 90-0068	3-5-90	PY

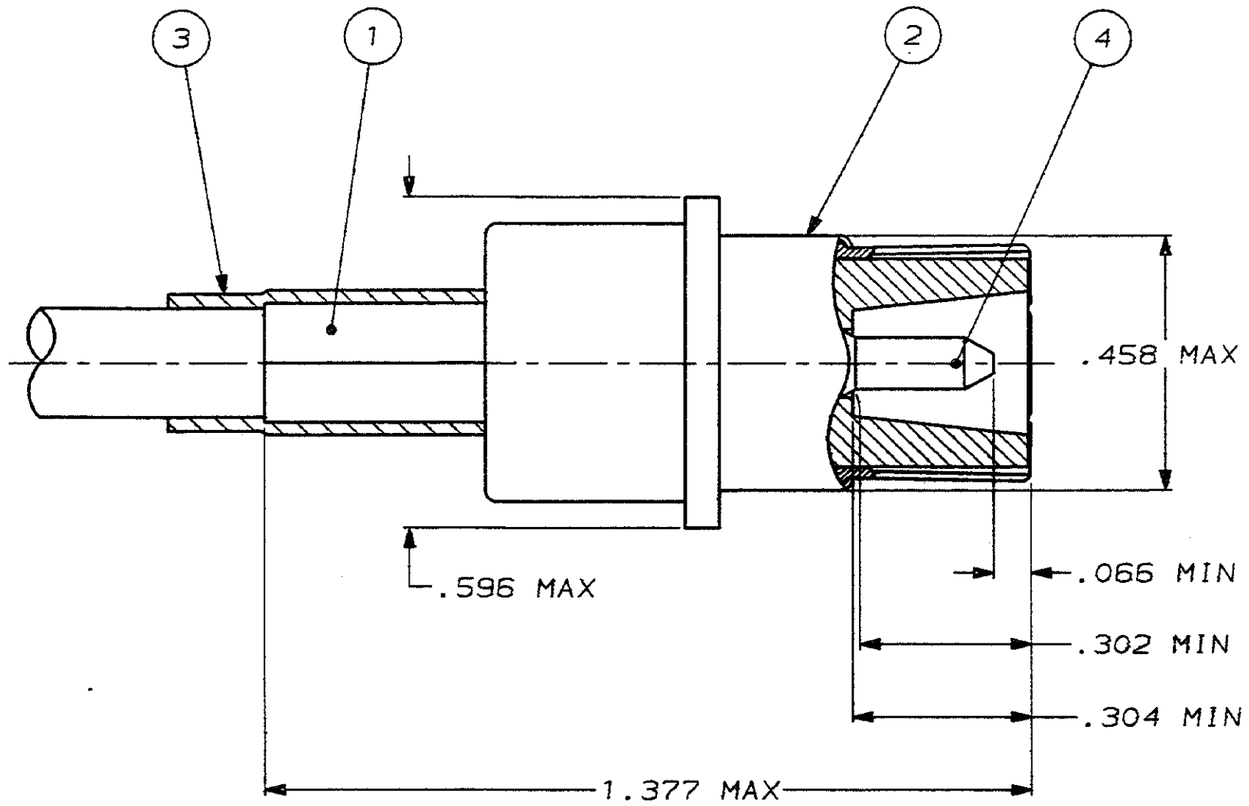

1. FOR USE WITH RG-142/U CABLE
2. BRAID CRIMP:USE MILITARY TOOL M22520/5-01, WITH DIE SET M22520/5-11,CAVITY A OR EQUIVALENT
3. CENTER CONTACT CRIMP:USE MILITARY TOOL M22520/5-01, WITH DIE SET M22520/5-11,CAVITY B OR EQUIVALENT

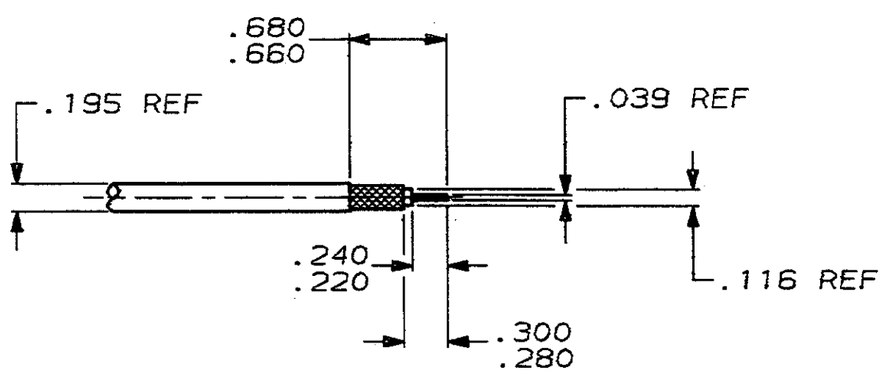

RECOMMENDED STRIP LENGTH
SCALE 1:1

QTY	PART NO	DESCRIPTION	ITEM NO
1	447113-1	CONTACT ASSEMBLY	4
1	228143-2	HEAT SHRINK TUBING	3
1	447112-1	PIN ASSEMBLY	2
1	446556-3	FERRULE	1

DO NOT SCALE PRINT.
UNLESS SPECIFIED
DIMENSIONS IN INCHES
TOLERANCES ON :
2 PLC DEC ± -
3 PLC DEC ± .005
ANGLES ± -

MATERIAL -

FINISH -

DR P. YEAGER 2-13-90
CHK J. CABARLO 2-26-90
APPD R. HOSLER 2-28-90
APPD * *
PRODUCT SPEC -
APPLICATION SPEC -
WEIGHT -

AMP | AMP INCORPORATED Harrisburg, Pa. 17105

NAME COAXIAL CONTACT, PIN, SIZE 1

SIZE C | FSCM NO 00779 | DRAWING NO 447095-3

SCALE 4:1 | SHEET 1 OF 1

CUSTOMER DRAWING

AMP 1471-6 REV 3-87

13 FEB 1990 13:35:24 Y05887 <UT128B>DEPTRA2C>U.RF>U.SIZE1