Chipsmall Limited consists of a professional team with an average of over 10 year of expertise in the distribution of electronic components. Based in Hongkong, we have already established firm and mutual-benefit business relationships with customers from,Europe,America and south Asia,supplying obsolete and hard-to-find components to meet their specific needs.

With the principle of “Quality Parts,Customers Priority,Honest Operation,and Considerate Service”,our business mainly focus on the distribution of electronic components. Line cards we deal with include Microchip,ALPS,ROHM,Xilinx,Pulse,ON,Everlight and Freescale. Main products comprise IC,Modules,Potentiometer,IC Socket,Relay,Connector.Our parts cover such applications as commercial,industrial, and automotives areas.

We are looking forward to setting up business relationship with you and hope to provide you with the best service and solution. Let us make a better world for our industry!

Contact us

Tel: +86-755-8981 8866 Fax: +86-755-8427 6832
Email & Skype: info@chipsmall.com Web: www.chipsmall.com
Address: A1208, Overseas Decoration Building, #122 Zhenhua RD., Futian, Shenzhen, China

DRAWING MADE IN AMERICAN PROJECTION

TOOL NUMBER	REMOVES TERMINAL	FROM	HOUSING		
455822-1	61061		480408		
	61062		480409		
	61063		480420		
	61064		480421		
			480422		
			480423		
			480451		
			480452		
455822-2	61445		480489	480617	480664
	61670		480490	480618	480665
	350018		480494	480619	480666
	350019		480495	480620	480667
	350171		480496	480621	480668
	350183		480497	480624	480669
	350184		480589	480625	480676
			480590	480626	480677
			480591	480627	480678
			480592	480654	480679
			480606	480655	
			480607	480656	
			480608	480657	
			480609	480658	
			480610	480659	
			480611	480660	
			480612	480661	
			480613	480662	
			480616	480663	

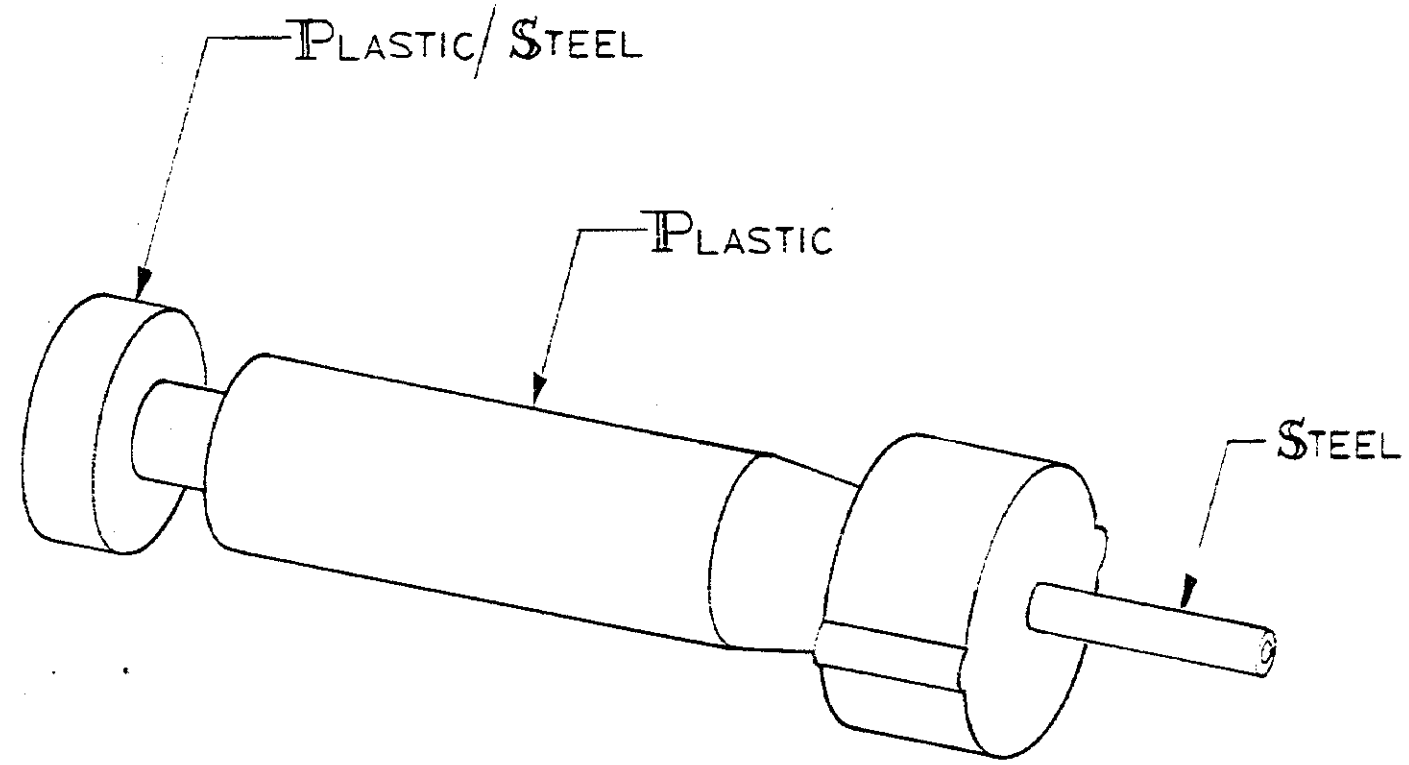

SUPERSEDED—REDRAWN

Unpublished copy not to be reproduced nor published without written permission of AMP Incorporated

LTR	REVISION RECORD	DR	CHK	DATE
01	SUPERSEDED - REDRAWN			

NUMBER 455822

DESCRIPTION
~~REQUIRED PER ASSEMBLY~~

DWG SIZE	~~NUMBER~~	~~NAME~~	~~REMARKS~~	REV

© 1972 BY AMP INCORPORATED. ALL RIGHTS RESERVED.
AMP PRODUCTS COVERED BY PATENTS AND/OR PATENTS PENDING.

CUSTOMER COPY REFERENCE ONLY

DR WMK 6/7/72
CHK KM 6-15-72
DE W.M. KISSINGER 11/10/71
APP

MATERIAL AND FINISH: SEE NOTES
WIRE-RANGE-INSULATION
TOLERANCE EXCEPT AS NOTED
SCALE NTS

AMP INCORPORATED HARRISBURG, PA.
CLASS COMBOLINE-MR CONN.
TYPE PINS AND SOCKETS
LOC A B NO 455822 REV 01

NAME TOOL, EXTRACTION

DIMENSIONS IN INCHES. DO NOT SCALE PRINT.
PRINT DIST

AMP 1253 REV 11/65

S