Chipsmall Limited consists of a professional team with an average of over 10 year of expertise in the distribution of electronic components. Based in Hongkong, we have already established firm and mutual-benefit business relationships with customers from,Europe,America and south Asia,supplying obsolete and hard-to-find components to meet their specific needs.

With the principle of “Quality Parts,Customers Priority,Honest Operation,and Considerate Service”,our business mainly focus on the distribution of electronic components. Line cards we deal with include Microchip,ALPS,ROHM,Xilinx,Pulse,ON,Everlight and Freescale. Main products comprise IC,Modules,Potentiometer,IC Socket,Relay,Connector.Our parts cover such applications as commercial,industrial, and automotives areas.

We are looking forward to setting up business relationship with you and hope to provide you with the best service and solution. Let us make a better world for our industry!

Contact us

Tel: +86-755-8981 8866 Fax: +86-755-8427 6832
Email & Skype: info@chipsmall.com Web: www.chipsmall.com
Address: A1208, Overseas Decoration Building, #122 Zhenhua RD., Futian, Shenzhen, China

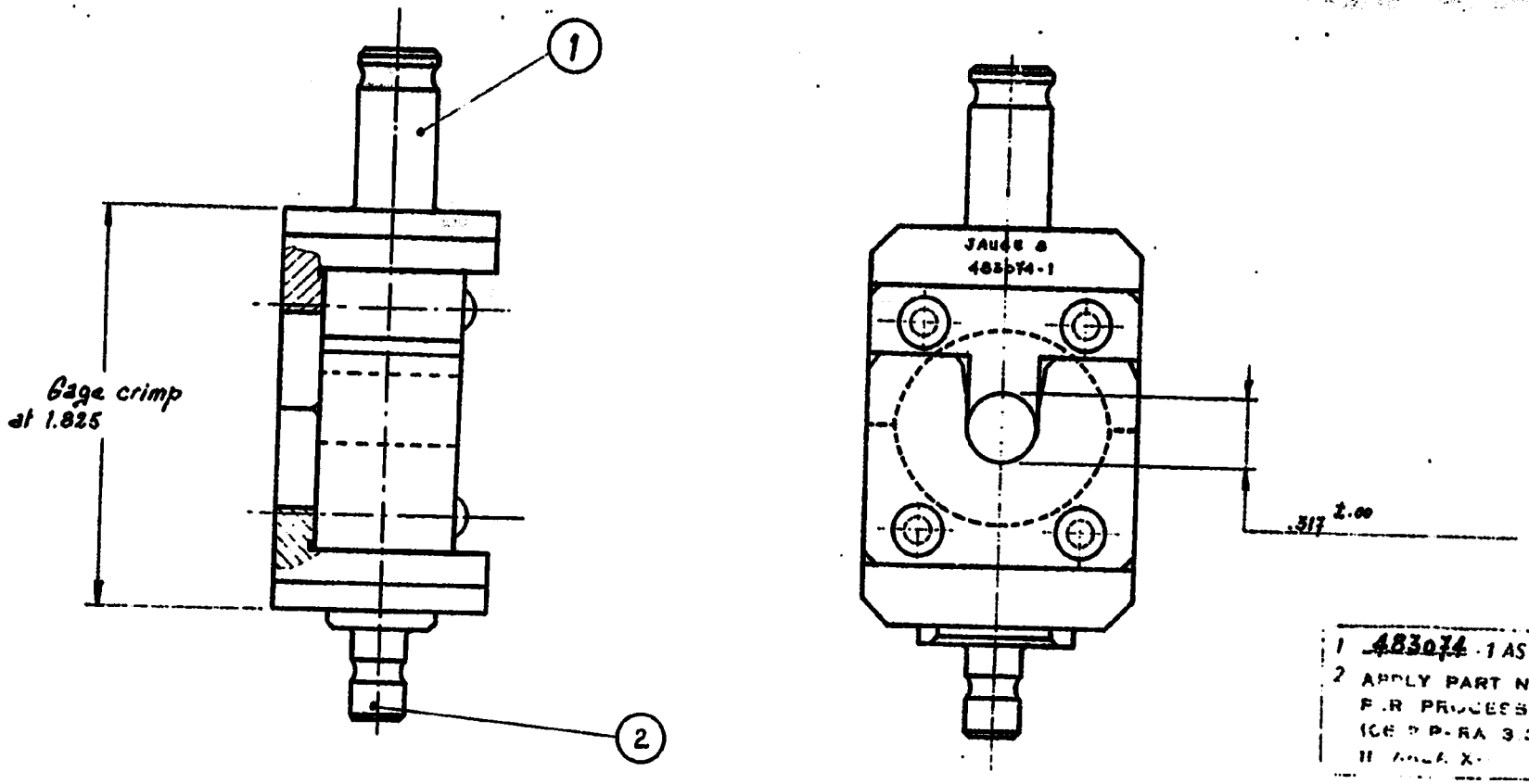

1 483074-1 AS S...
2 APPLY PART NUMBER
FOR PROCESS SPEC
ICE 9 P-RA 3 3-A
II ANLA X-

PART LIST

ITEM	P/N	SIZE	NAME	NUMBER
5				
4				
3				
2	483082	B	Die assembly lower	1
1	483078	B	Die assembly upper	1

REVISION RECORD			
A	ECR-07-028567	LS	11/07

UNLESS OTHERWISE SPECIFIED: REMOVE BURRS BREAK SHARP EDGES .010 R MAX; DIMENSIONS .00=±.02 .000=±.005 .0000=±.0005; ANGLES ± 0°30

MATERIAL —
HEAT TREAT —
COATING OF PLATING —

DR 09.XII.77
CHK
APP
DEL

Tyco Electronics
Tyco Electronics AMP GmbH
64625 Bensheim (Germany)

TERMINAL #8
HOST USED 68061
LOC F
NO C- 483 074
REV A

DIE ASSEMBLY
Crimper, Unterbaugruppe

SHEET 1 OF 1

DIFFUSION N°