Chipsmall Limited consists of a professional team with an average of over 10 year of expertise in the distribution of electronic components. Based in Hongkong, we have already established firm and mutual-benefit business relationships with customers from,Europe,America and south Asia,supplying obsolete and hard-to-find components to meet their specific needs.

With the principle of “Quality Parts,Customers Priority,Honest Operation,and Considerate Service”,our business mainly focus on the distribution of electronic components. Line cards we deal with include Microchip,ALPS,ROHM,Xilinx,Pulse,ON,Everlight and Freescale. Main products comprise IC,Modules,Potentiometer,IC Socket,Relay,Connector.Our parts cover such applications as commercial,industrial, and automotives areas.

We are looking forward to setting up business relationship with you and hope to provide you with the best service and solution. Let us make a better world for our industry!

Contact us

Tel: +86-755-8981 8866 Fax: +86-755-8427 6832
Email & Skype: info@chipsmall.com Web: www.chipsmall.com
Address: A1208, Overseas Decoration Building, #122 Zhenhua RD., Futian, Shenzhen, China

THIS DRAWING IS UNPUBLISHED. RELEASED FOR PUBLICATION -,- .
© COPYRIGHT - BY TYCO ELECTRONICS CORPORATION. ALL RIGHTS RESERVED.

LOC	DIST
AD	00

REVISIONS

P	LTR	DESCRIPTION	DATE	DWN	APVD
	B	EC 0G3C 0007 05	07FEB05	BSV	JRO

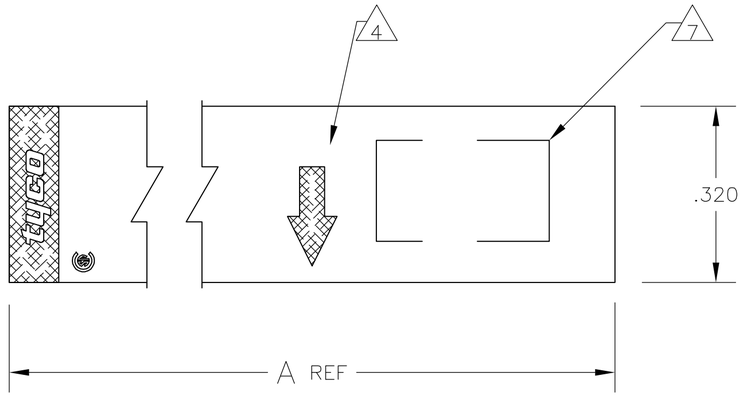

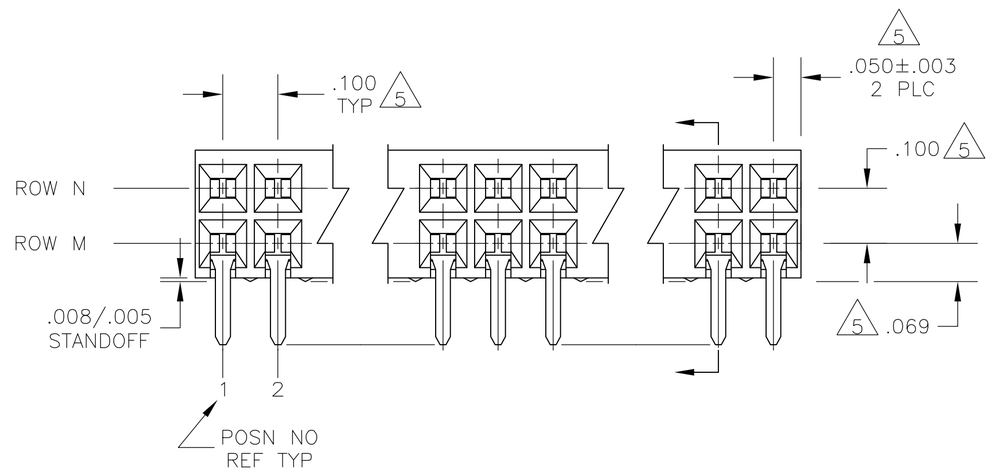

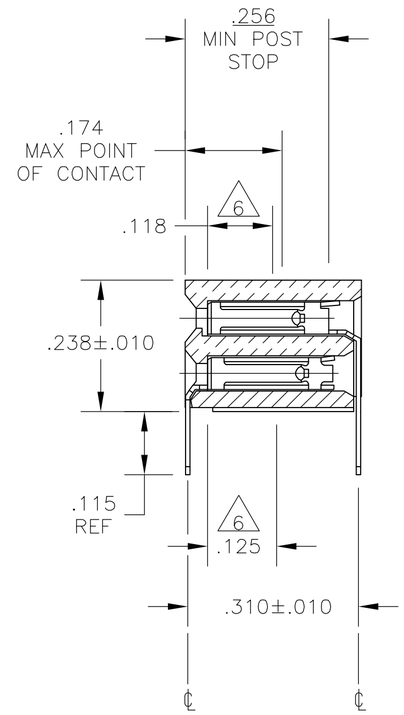

1. HOUSING MATERIAL : GLASS FILLED, FLAME RETARDANT POLYESTER, COLOR–BLACK.
2. CONTACT MATERIAL : PHOSPHOR BRONZE.
3. CONTACT FINISH : DUPLEX PLATED .000030 GOLD ON CONTACT AREA, .000150–.000300 BRIGHT TIN–LEAD ON SOLDER TINES, ALL OVER .000050 MIN. NICKEL.
4. MOLDED IN ARROW DESIGNATES THE MATING FACE OF THE CONNECTOR.
5. DIMENSIONS PERTAIN TO CAVITY CENTERLINES.
6. POINT OF MEASUREMENT FOR PLATING THICKNESS OF CONTACT AREA.
7. DATE CODE AND PART NUMBER MARKED IN APPROXIMATE LOCATION SHOWN.
8. CONTACT FINISH : DUPLEX PLATED .000030 GOLD ON CONTACT AREA, .000150–.000300 MATTE TIN ON SOLDER LEADS, ALL OVER .000050 MIN. NICKEL.
9. ROHS 2002 /95/EC COMPLIANT

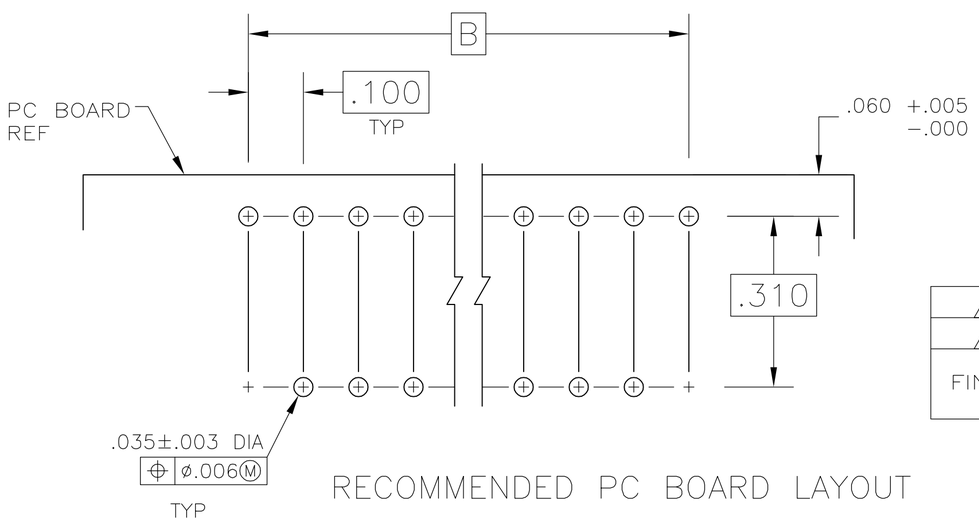

RECOMMENDED PC BOARD LAYOUT

8	3, 6, 12, & 15	3, 6, 12, & 15	1.600	1.700	26/34	9 5–147046–1
3	3, 6, 12, & 15	3, 6, 12, & 15	1.600	1.700	26/34	147046–1
FINISH	ROW M	ROW N	B	A	NO. OF POSITIONS	ASSEMBLY PART NUMBER
	POSITIONS OMITTED					

THIS DRAWING IS A CONTROLLED DOCUMENT.

DIMENSIONS: INCHES

TOLERANCES UNLESS OTHERWISE SPECIFIED:
0 PLC ± –
1 PLC ± –
2 PLC ± –
3 PLC ± –
4 PLC ± –
ANGLES ± –

MATERIAL 1 2
FINISH 3 8

DWN J.HERRINGTON 16SEP97
CHK J.HERRINGTON 16SEP97
APVD J.HERRINGTON 16SEP97
PRODUCT SPEC —
APPLICATION SPEC —
WEIGHT —

tyco Electronics
Tyco Electronics Corporation
Harrisburg, Pa 17105–3608

NAME
AMPMODU MOD II RECEPTACLE ASSEMBLY, HORIZONTAL, .100 CL, 2 ROW, CLOSED–ENTRY, SHORT POINT–OF–CONTACT, DUPLEX PLATING

SIZE	CAGE CODE	DRAWING NO	RESTRICTED TO
A2	00779	C-147046	—

CUSTOMER DRAWING | SCALE 5:1 | SHEET 1 OF 1 | REV B

147046

AMP 1471–9 REV 31MAR2000